DO NOT SCALE THE DRAWING

IF IN DOUBT ASK . . . . . .

ALL DIMENSIONS ARE IN mm

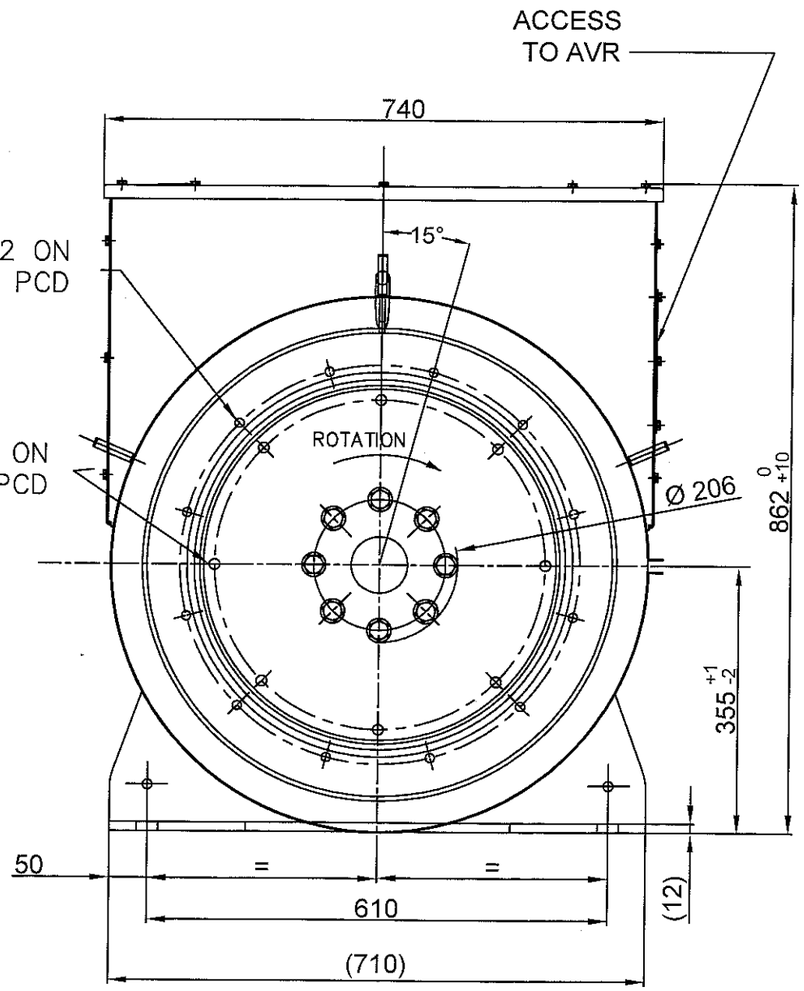

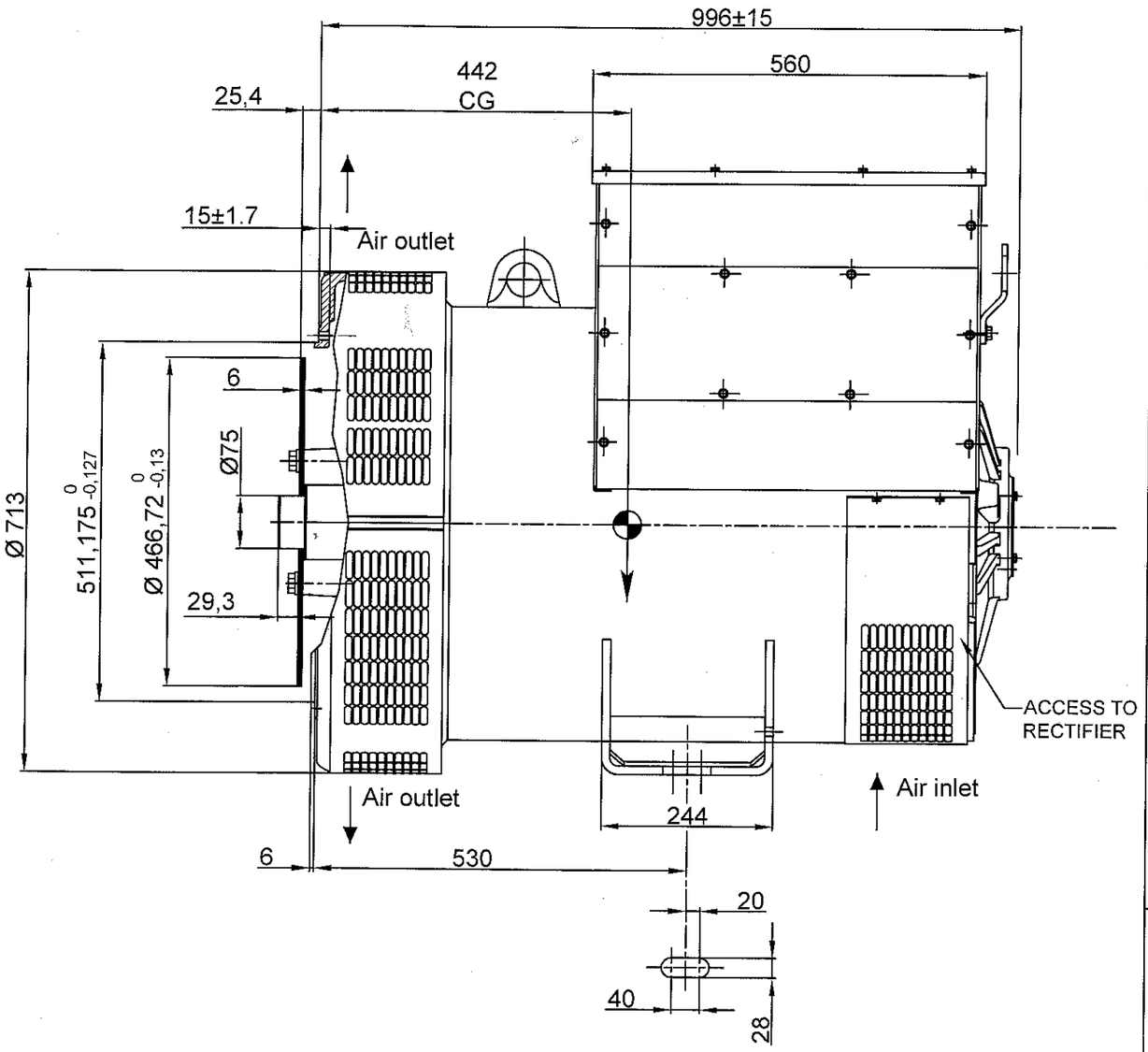

CONSTRUCTION: B3

COOLING : IC01

PROTECTION : IP 23

WEIGH in kg : 1008 approx.

1	E4	-----	LOGO AND NEW FORMAT UPDATED.WIDTH 15±1.7 ADDED.	AMAR	01/12/17
REV	ZONE	CT No.	BRIEF RECORD	SIGNATURE	DATE

ALL INFORMATION CONTAINED IN THIS DOCUMENT IS CONFIDENTIAL AND THE PROPERTY OF THE COMPANY. REPRODUCTION OF THESE IN ANY FORM IS TO BE DONE WITH PERMISSION OF THE COMPANY.

LEROY-SOMER

USED ON	SCALE	DRAWN	CHECKED	APPROVED
LSA 47.2 VS3 SINGLE BEARING (SAE1-14")	NTS	OSS Dt. 23/10/14	KRR Dt. 23/10/14	C.G Dt. 23/10/14

TITLE

DIMENSION DRAWING

DRG. No. AG314264 R01

1st RELEASE ON CT No. 14A-270

SHEET No. 01 OF 01

NIDEC INDUSTRIAL AUTOMATION INDIA PRIVATE LTD
BANGALORE-562162

NIDEC/DSG/FR/00/R0