4ZT3.5-WX

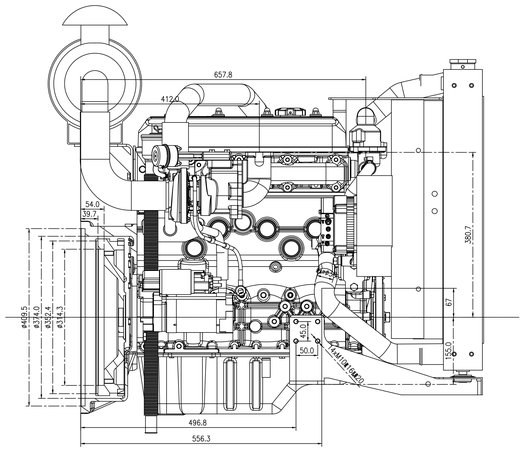

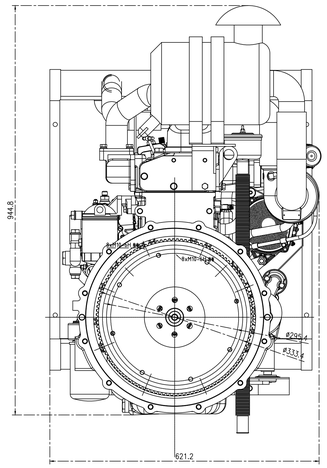

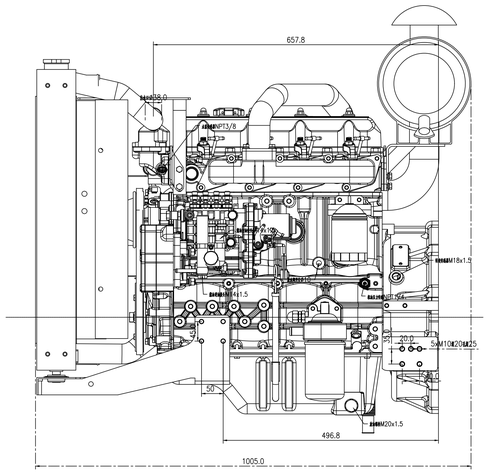
657.8
ø438.0
2xM13/8
2xM18x1.5
2xM18x1.5
2xM18x1.5