DO NOT SCALE THE DRAWING | IF IN DOUBT ASK ..... | ALL DIMENSIONS ARE IN mm

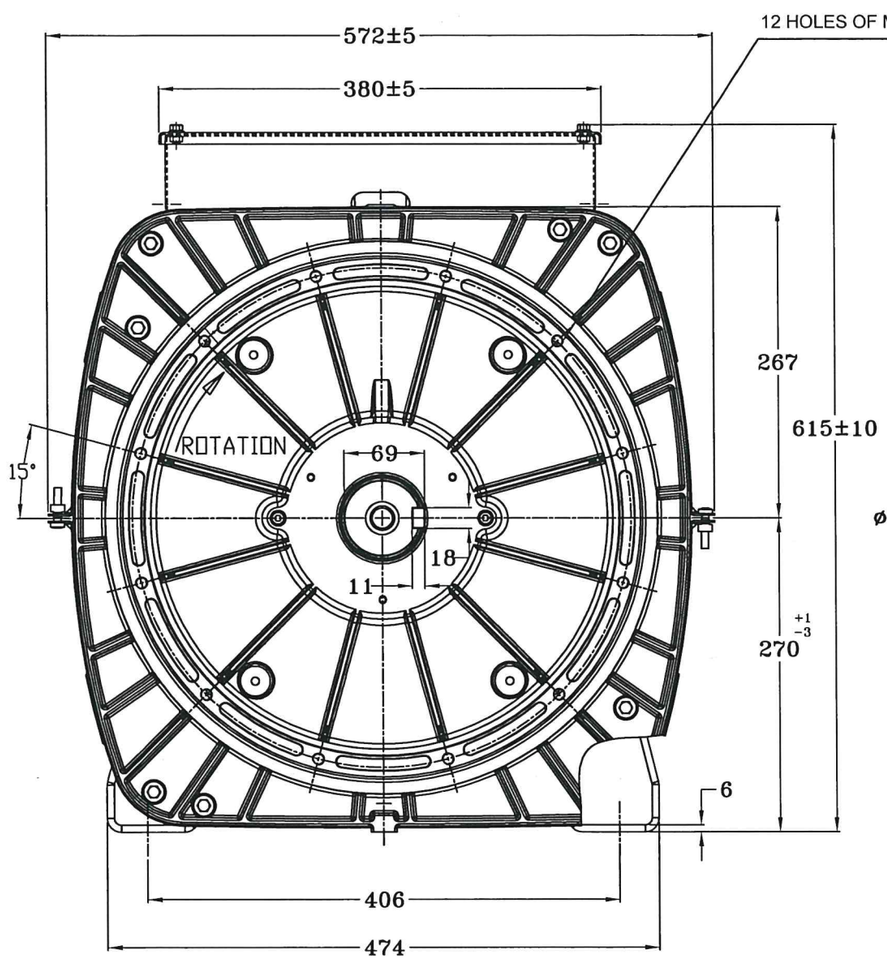

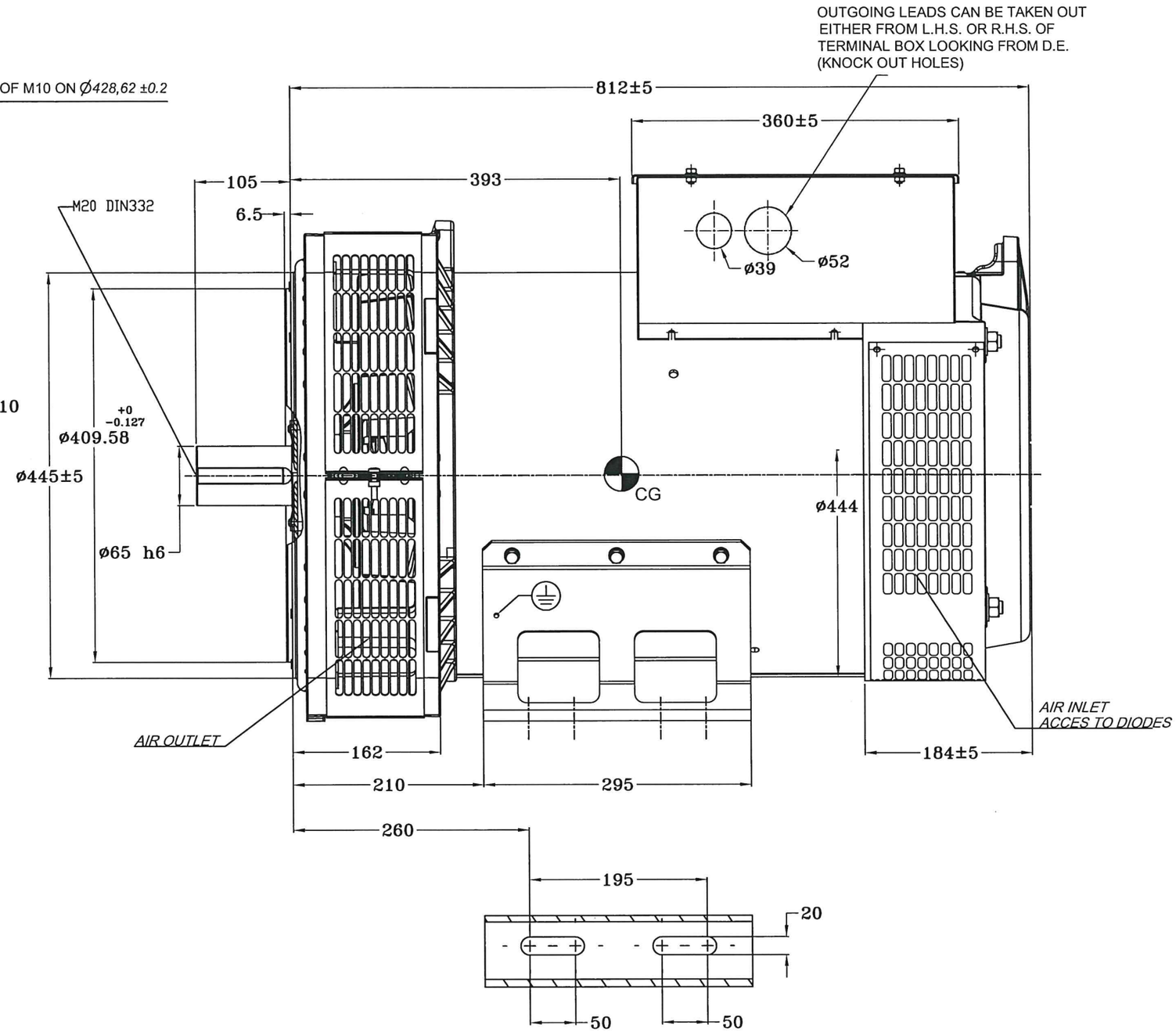

WEIGHT OF THE MACHINE : 458±5 kg

MOMENT OF INERTIA (J kgm2) : 1.578

REV	ZONE	CT No.	BRIEF RECORD	SIGNATURE	DATE
1	—	—	DIM. 615±10 WAS 607±10. ADDRESS & LOGO UPDATED.	MOHAN	30.04.19

ALL INFORMATION CONTAINED IN THIS DOCUMENT IS CONFIDENTIAL AND THE PROPERTY OF THE COMPANY. REPRODUCTION OF THESE IN ANY FORM IS TO BE DONE WITH PERMISSION OF THE COMPANY.

LEROY-SOMER

USED ON	SCALE	DRAWN	CHECKED	APPROVED
LSAP 44.3 H (DOUBLE BEARING)	NTS	MAN Dt. 31/03/17	Dt. 2/5/18	CG Dt. 2/5/18

TITLE

DIMENSION DRAWING

BRUSHLESS AC GENERATORS

DRG. No. AG317149 R01

1st RELEASE ON CT No. ---

SHEET No. 01 OF 01

NIDEC INDUSTRIAL AUTOMATION INDIA PRIVATE LTD
BANGALORE-562162

NIDEC/DSG/FR/03/R0