DO NOT SCALE THE DRAWING

IF IN DOUBT ASK . . . . . .

ALL DIMENSIONS ARE IN mm

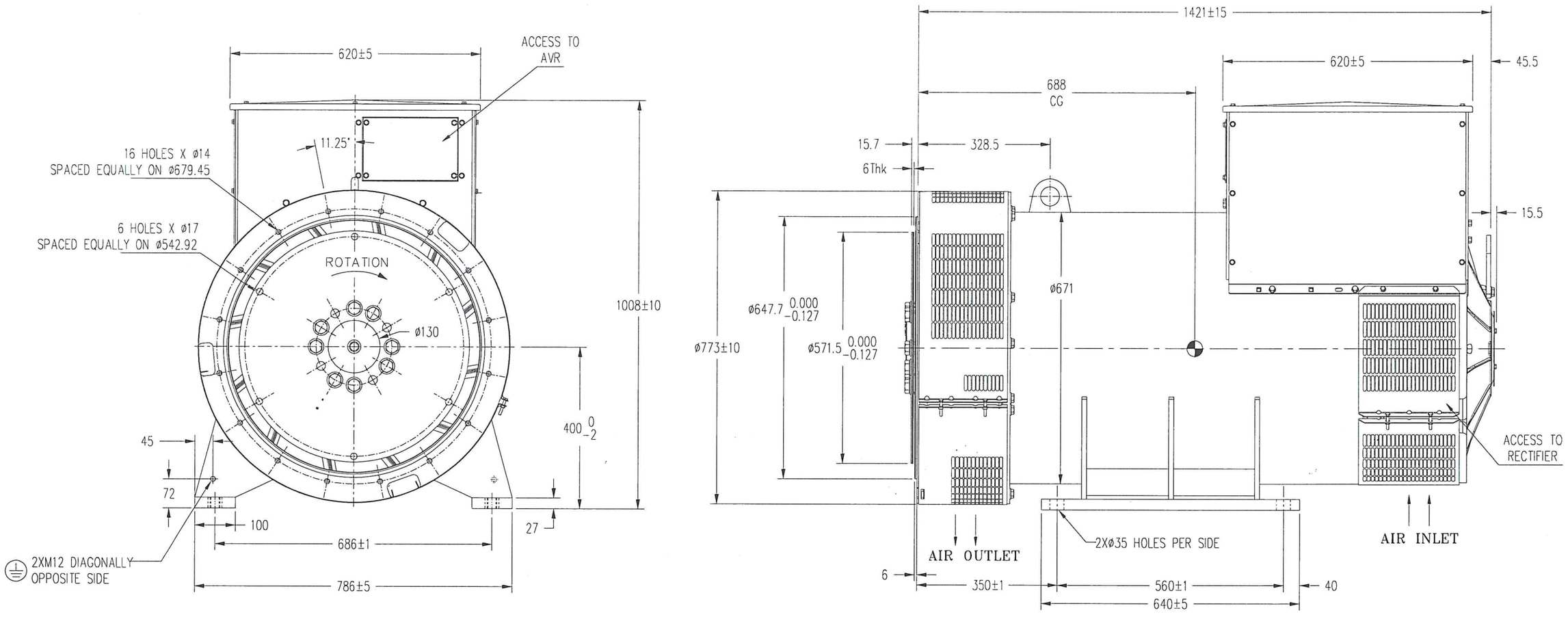

NOTE:

CONSTRUCTION : B3

COOLING : IC01

PROTECTION : IP 23

WEIGHT : 1909±2% kg.

REV	ZONE	CT No.	BRIEF RECORD	SIGNATURE	DATE

ALL INFORMATION CONTAINED IN THIS DOCUMENT IS CONFIDENTIAL AND THE PROPERTY OF THE COMPANY. REPRODUCTION OF THESE IN ANY FORM IS TO BE DONE WITH PERMISSION OF THE COMPANY.

LEROY-SOMER

USED ON	SCALE	DRAWN	CHECKED	APPROVED
LSA 49.3 L10 (SAE 0-18")	NTS	SD Dt. 04-07-2024	VA Dt. 04-07-2024	BSS Dt. 04-07-2024

TITLE: DIMENSION DRAWING

DRG. No. AG3232522 R00

1st RELEASE ON CT No. — —

SHEET No. 01 OF 01

NIDEC INDUSTRIAL AUTOMATION INDIA PRIVATE LTD
BANGALORE-562162

NIDEC/DSC/FR/001R0