Nidec

User Guide

Commander S100

Variable Speed A.C drive for induction motors

5 YEAR WARRANTY

Part Number: 0478-0650-07 Issue 7

MARSHAL

Download on the App Store

GET IT ON Google Play

Compliance Information

Manufacturer: Nidec Control Techniques Limited ("we", "our")
Registered office: The Gro, Newtown, Powys, SY16 3BE United Kingdom
Registered in: England and Wales, company registration number 01236886
Manufacturer's EU Authorized Representative: Nidec Netherlands B.V., Kubus 155, 3364 DG Sliedrecht, the Netherlands, registered at the Dutch Trade Register under number 33213151; Tel. +31 (0)184 420 555, info.nl@mail.nidec.com

Original instructions

With reference to the UK Supply of Machinery (Safety) Regulations 2008 and the EU Machinery Directive 2006/42/EC, the English version of this Manual constitutes the original instructions. Manuals published in other languages are translations of the original instructions and the English language version of this Manual prevails over any other language version in the event of inconsistency.

Documentation and user software tools

Manuals, datasheets and software that we make available to users of our products can be downloaded from: **http://www.controltechniques.com/support**
MARSHAL (Mobile app): This application is available for download from the Google Play Store and the Apple App Store.

Manuals may be supported by an errata list. This will be located alongside the manuals if applicable.

Warranty and liability

The contents of this Manual are presented for information purposes only, and while every effort has been made to ensure their accuracy, they are not to be construed as warranties or guarantees, express or implied, regarding the products or services described herein or their use or applicability. All sales are governed by our terms and conditions, which are available on request. We reserve the right to modify or improve the designs, specifications or performance of our products at any time without notice. For full details of the warranty terms applicable to the product, contact the supplier of the product.

In no event and under no circumstances shall we be liable for damages and failures due to misuse, abuse, improper installation, or abnormal conditions of temperature, dust, or corrosion, or failures due to operation outside the published ratings for the product, nor shall we be liable for consequential and incidental damages of any kind.

Environmental management

We operate an Environmental Management System which complies with the requirements of ISO 14001:2015. Further information on our Environmental Statement can be found at: **http://www.controltechniques.com/environment**

Restriction and control of hazardous substances

The products covered by this Manual comply with the following legislation and regulations on the restriction and control of hazardous substances:

UK Restriction of the Use of Certain Hazardous Substances in Electrical and Electronic Equipment Regulations 2012
UK REACH etc. (Amendment etc.) (EU Exit) Regulations 2020, European Union REACH Regulation EC 1907/2006
EU restriction of the Use of certain Hazardous Substances in Electrical and Electronic Equipment (RoHS) - Directive 2011/65/EU
EC Regulation 1907/2006 on the Registration, Evaluation, authorisation, and restriction of Chemicals (REACH)
Chinese Administrative Measures for Restriction of Hazardous Substances in Electrical and Electronic Products 2016/07/01
U.S. Environmental Protection Agency ("EPA") regulations under the Toxic Substances Control Act ("TSCA")
MEPC 68/21 / Add.1, Annex 17, Resolution MEPC.269(68) 2015 Guidelines for the development of the inventory of hazardous materials

The products covered by this Manual do not contain asbestos.

Further information on REACH and RoHS can be found at: **http://www.controltechniques.com/environment**

Conflict minerals

With reference to the Conflict Minerals (Compliance) (Northern Ireland) (EU Exit) Regulations 2020, the U.S. Dodd-Frank Wall Street Reform and Consumer Protection Act and Regulation (EU) 2017/821 of the European Parliament and of the European Council:

We have implemented due diligence measures for responsible sourcing, we conduct conflict minerals surveys of relevant suppliers, we continually review due diligence information received from suppliers against company expectations and our review process includes corrective action management. We are not required to file an annual conflict minerals disclosure. Nidec Control Techniques Limited is not an issuer as defined by the U.S. SEC.

Disposal and recycling (WEEE)

The products covered by this Manual fall within the scope of the UK Waste Electrical and Electronic Equipment Regulations 2013, EU Directive 2012/19/EU amended by EU Directive 2018/849 (EU) on Waste Electrical and Electronic Equipment (WEEE).

When electronic products reach the end of their useful life, they must not be disposed of along with domestic waste but should be recycled by a specialist recycler of electronic equipment. Our products are designed to be easily dismantled into their major component parts for efficient recycling. Most materials used in our products are suitable for recycling.

Our product packaging is of good quality and can be re-used. Smaller products are packaged in strong cardboard cartons which have a high recycled fibre content. Cartons can be re-used and recycled. Polythene, used in protective film and bags for the ground screws, can be recycled. When preparing to recycle or dispose of any product or packaging, please observe local legislation and best practice.

Copyright and trade marks

Copyright © 2 August 2021 Nidec Control Techniques Limited. All rights reserved.

No part of this Manual may be reproduced or transmitted in any form or by any means including by photocopying, recording or by an information storage or retrieval system, without our permission in writing.

The Nidec logo is a trade mark of Nidec Corporation. The Control Techniques logo is a trade mark owned by Nidec Control Techniques Limited. All other marks are property of their respective owners.

Contents

1 Safety information 7
1.1 Important safety information 7
1.2 Responsibility 7
1.3 Compliance with regulations 7
1.4 Electrical hazards 7
1.5 Mechanical hazards 7
1.6 Motor 7
1.7 Adjusting parameters 8
1.8 Electromagnetic compatibility (EMC) 8
1.9 Grounding 8
1.10 Fuses and circuit breakers 8
1.11 RCD 8
1.12 Safety of the control circuits 8
1.13 Terminal connections and torque settings 8
1.14 Environmental limits 8
1.15 Enclosure 8
1.16 Hazardous environments 8
1.17 Access to equipment 8
1.18 Routine maintenance 8
1.19 Repairs 8
1.20 Hazardous materials 8

2 Product information 9
2.1 Introduction 9
2.2 Marshal commissioning and diagnostic app 9
2.3 Model number 9
2.4 Rating information 10
2.5 Date code format 10
2.6 Drive ratings 11
2.7 Motor sizing 12
2.8 Drive features 13

3 Mechanical installation 15
3.1 Planning the installation 15
3.2 Drive dimensions and mounting 17
3.3 Enclosure dimensions 18
3.4 Drive fan operation 20
3.5 Routine maintenance 20

4 Electrical installation 21
4.1 Power connections 21
4.2 Terminal torque settings 23
4.3 Cable selection 23
4.4 Fuse and MCB selection 25
4.5 Supply requirements 26
4.6 Ground leakage 29
4.7 Electromagnetic compatibility (EMC) 30
4.8 Control connections 35
4.9 Communication connections 38

5 Getting started 40
5.1 Marshal mobile app 40
5.2 Connect 42
5.3 Understanding the display 42
5.4 Using the keypad 43
5.5 Understanding the menu structure 45
5.6 Saving parameters 45
5.7 Restoring parameter defaults 45
5.8 Drive security 45

6 Running the motor 46
6.1 Basic setup 46
6.2 Controlling the motor speed 47
6.3 Running, stopping and controlling motor direction 52
6.4 Connecting motor thermistors 56

7 Drive parameters 57
7.1 Menu 0 - FastStart 57
7.2 Single line parameter descriptions 58
7.3 Parameter descriptions 63

8 Communications 102
8.1 Control Techniques MODBUS RTU specification 102
8.2 Controlling the motor with MODBUS 109

9 Diagnostics 111
9.1 Alarms 111
9.2 Errors 112

10 Technical data 116
10.1 Drive derating 116
10.2 Power dissipation 118
10.3 Drive storage 118
10.4 Emission compliance 119
10.5 Maximum cable lengths 121
10.6 Starts per hour 121
10.7 Start-up time 121
10.8 Maximum output frequency 121
10.9 Accuracy and resolution 121
10.10 Acoustic noise 121
10.11 Corrosive gasses 122
10.12 IP rating 122
10.13 Vibration 123

11 UL Listing Information 124
11.1 UL file reference 124
11.2 Environment 124
11.3 Mounting 124
11.4 Terminal torque 124
11.5 Wiring 124
11.6 Ground connections 124
11.7 Over voltage category 124
11.8 Branch circuit protection 124
11.9 Solid state short circuit protection 124
11.10 Short circuit current rating (SCCR) 124
11.11 Motor overload protection 124

UK Declaration of Conformity

1. Product range

Commander S-series general purpose variable speed AC motor drives

2. Name and address of the manufacturer and authorised representative

Manufacturer

Nidec Control Techniques Ltd,
The Gro,
Pool Road,
Newtown,
Powys,
SY16 3BE.
UK
Registered in England and Wales. Company Reg. No. 01236886
Telephone: 00 44 1686 612000
E mail: cthoadmin@mail.nidec.com, Web: www.controltechniques.com

Authorised representatives

Nidec Netherlands B.V.
Kubus 155
3364 DG Sliedrecht
Netherlands.

3. Responsibility

This declaration is issued under the sole responsibility of the manufacturer.

4. Object of the declaration

Model number	Interpretation	Model number nomenclature S100 - aabcdef
	Basic series	S100
aa	Frame Size	01, 02, 03, 04
b	Voltage Rating	1 = 100 V, 2 = 200 V, S = 200 V 1 ph, D = 200 V 1/3 ph, 4 = 400 V
c	Current Index	0 to 9
d	Internal EMC filter	1 = C1, 3 = C3
e	Version	0
f	Customisation	1 = EMEA and Pacific, B = Americas, C = LS, K = customer specific, h = others

5. Declaration

The object of the declaration is in conformity with the relevant UK statutory requirements.

UK regulations
Electrical Equipment (Safety) Regulations 2016
Electromagnetic Compatibility Regulations 2016
The Restriction of the Use of Certain Hazardous Substances in Electrical and Electronic Equipment Regulations 2012
The Ecodesign for Energy-Related Products Regulations 2021 No.745

6. References to the relevant harmonised EN standards

EN 61800-5-1:2007 + A1:2017 + A11: 2021	Adjustable speed electrical power drive systems - Part 5-1: Safety requirements - Electrical, thermal and energy
BS 61800-3: 2018	Adjustable speed electrical power drive systems - Part 3: EMC requirements and specific test methods
BS 61000-6-2: 2019	Electromagnetic compatibility (EMC) - Part 6-2: Generic standards - Immunity for industrial environments
BS 61000-6-4: 2019	Electromagnetic compatibility (EMC) - Part 6-4: Generic standards - Emission standard for industrial environments
BS EN 61000-3-2:2019+A1:2021	Electromagnetic compatibility (EMC) - Part 3-2: Limits for harmonic current emissions (equipment input current ≤ 16 A per phase)
EN 61000-3-3:2013+A1:2019 + A2:2021	Electromagnetic compatibility (EMC) - Part 3-3: Limitation of voltage changes, voltage fluctuations and flicker in public, low voltage supply systems, for equipment with rated current ≤ 16 A per phase and not subject to conditional connection
EN 61000-3-12: 2011	Electromagnetic compatibility (EMC) - Part 3-12: Limits. Limits for harmonic currents produced by equipment connected to public low-voltage systems with input current > 16 A and ≤ 75 A per phase.

7. Responsible person

Jonathan Holman-White
Vice President, Research and Development
Date: 10th January 2025
Newtown, Powys, UK.

IMPORTANT NOTE

These products are Basic Drive Modules, intended to be used with motors, controllers, electrical protection components and other equipment to form Power Drive Systems. Compliance with safety and EMC regulations depends upon installing and configuring the drive modules correctly.

The drives must be installed only by professional installers who are familiar with requirements for safety and EMC. Refer to the Safety information and Installation instructions supplied with the drive. The installer is responsible for ensuring that the Power Drive System complies with all applicable laws in the country where it is to be used.

EU Declaration of Conformity

1. Product range

Commander S-series general purpose variable speed AC motor drives, including option modules and accessories.

2. Name and address of the manufacturer and authorised representative

Manufacturer

Nidec Control Techniques Ltd,
The Gro,
Pool Road,
Newtown,
Powys,
SY16 3BE.
UK
Registered in England and Wales. Company Reg. No. 01236886
Telephone: 00 44 1686 612000
E mail: cthoadmin@mail.nidec.com, Web: www.controltechniques.com

Authorised representatives

Nidec Netherlands B.V.
Kubus 155
3364 DG Sliedrecht
Netherlands.

3. Responsibility

This declaration is issued under the sole responsibility of the manufacturer.

4. Object of the declaration

Model number	Interpretation	Model number nomenclature S100 - aabcdef
	Basic series	S100
aa	Frame Size	01, 02, 03, 04
b	Voltage Rating	1 = 100 V, 2 = 200 V, S = 200 V 1 ph, D = 200 V 1/3 ph, 4 = 400 V
c	Current Index	0 to 9
d	Internal EMC filter	1 = C1, 3 = C3
e	Version	0
f	Customisation	1 = EMEA and Pacific, B = Americas, C = LS, K = customer specific, h = others

5. Declaration

The object of the declaration is in conformity with the relevant European Union harmonisation legislation.

Low Voltage Directive (2014/35/EU)
Electromagnetic Compatibility Directive (2014/30/EU)
Restriction of Hazardous Substances Directives (2011/65/EU and 2015/863/EU).
Regulation 2019/1781 of directive 2009/125/EC (Energy related products)

6. References to the relevant harmonised EN standards

The variable speed drive products listed above have been designed and manufactured in accordance with the following European harmonised standards:

EN 61800-5-1:2007 + A1:2017 + A11: 2021	Adjustable speed electrical power drive systems - Part 5-1: Safety requirements - Electrical, thermal and energy
EN 61800-3: 2018	Adjustable speed electrical power drive systems - Part 3: EMC requirements and specific test methods
EN 61000-6-2: 2019	Electromagnetic compatibility (EMC) - Part 6-2: Generic standards - Immunity for industrial environments
EN 61000-6-4: 2019	Electromagnetic compatibility (EMC) - Part 6-4: Generic standards - Emission standard for industrial environments
EN 61000-3-2:2019 + A1:2021	Electromagnetic compatibility (EMC) - Part 3-2: Limits for harmonic current emissions (equipment input current ≤ 16 A per phase)
EN 61000-3-3:2013+A1:2019 + A2:2021	Electromagnetic compatibility (EMC) - Part 3-3: Limitation of voltage changes, voltage fluctuations and flicker in public, low voltage supply systems, for equipment with rated current ≤ 16 A per phase and not subject to conditional connection
EN 61000-3-12: 2011	Electromagnetic compatibility (EMC) - Part 3-12: Limits. Limits for harmonic currents produced by equipment connected to public low-voltage systems with input current > 16 A and ≤ 75 A per phase.

7. Responsible person

Jon Holman-White
Vice President, Research and Development
Nidec Control Techniques Ltd
Date: 10th January 2025
Newtown, Powys, UK.

IMPORTANT NOTE

These products are Basic Drive Modules, intended to be used with motors, controllers, electrical protection components and other equipment to form Power Drive Systems. Compliance with safety and EMC regulations depends upon installing and configuring the drive modules correctly.

The drives must be installed only by professional installers who are familiar with requirements for safety and EMC. Refer to the Safety information and Installation instructions supplied with the drive. The installer is responsible for ensuring that the Power Drive System complies with all applicable laws in the country where it is to be used.

1 Safety information

1.1 Important safety information

Specific warnings are given at the relevant places in this User Guide as follows:

WARNING
This type of warning contains information which is essential for avoiding an electric shock.

WARNING
This type of warning contains information which is essential for avoiding a safety hazard.

CAUTION
A Caution contains information which is necessary for avoiding a risk of damage to the product or other equipment.

NOTE
A Note contains information which helps to ensure correct operation of the product.

1.1.1 Hazards

This User Guide applies to the Commander S100 which are Basic Drive Modules (BDM) and auxiliary equipment. All safety information within this guide must be observed. In all applications the hazards associated with powerful electrical drive is present.

1.2 Responsibility

It is the responsibility of the installer to ensure the safety of the complete Power Drive System (PDS), so as to avoid the risk of injury in normal operation, in the event of a fault and of reasonably foreseeable misuse.

The manufacturer of the BDM drive accepts no liability for any consequences resulting from inappropriate, negligent, or incorrect system design and installation or as a result of drive failure.

Drives are intended as components for professional incorporation into complete systems. The drive uses high voltages and currents, has a high level of stored electrical energy, and is used to control equipment which can cause injury and generate excessive acoustic noise. If installed incorrectly the drive may present a safety hazard.

System design, installation, commissioning, start-up and maintenance must be carried out by personnel with the necessary training and competence who must read all of the safety information and instructions in this User Guide.

1.3 Compliance with regulations

The installer is responsible of ensuring that the PDS complies with all applicable laws, regulations, and codes in the country where it is to be used, including but not limited to the following:
UK Electrical Equipment (Safety) Regulations 2016
EU Low Voltage Directive 2014/35

UK Electromagnetic Compatibility Regulations 2016
EU Electromagnetic Compatibility Directive 2014/30/EU

UK Supply of Machinery (Safety) Regulations 2008
EU Machinery Directive 2006/42/EC

USA National Electric Code (NEC)
Canadian Electrical Code.

Particular attention must be given to the cross-sectional areas of conductors, the selection of fuses or other protection, and protective ground (earth) connections. This guide contains instructions for achieving compliance with specific EMC standards.

1.4 Electrical hazards

The voltages used in the drive can cause severe electrical shock and/or burns and could be lethal. Care is necessary when working with or adjacent to the drive. Hazardous voltage may be present in any of the following locations:

- A.C. supply cables and connections
- Motor cables and connections
- Relay cable and connections
- Many internal parts of the drive.

No commands remove dangerous voltages from the drive or motor. E.g. stop, rdy or inh.

1.4.1 Mechanical to electrical energy

Unsafe voltages can be present on the drive even with the A.C. supply disconnected if the motor shaft is mechanically driven by another source of power.

1.4.2 Stored electrical charge

WARNING
Risk of Electric Shock.
The drive contains capacitors that remain charged to a potentially lethal voltage after the A.C. supply has been disconnected. If the drive has been energized, the A.C. supply must be isolated for at least 5 minutes before work may continue. In the event of a failure the stored charge could remain longer.

1.4.3 Products connected by plug and socket

If a plug and socket are used to connect the PDS / BDM to the supply, the plug should conform to IEC60309.

A hazard may exist where the drive is incorporated into a product which is connected to the supply by a plug and socket. When unplugged, the pins of the plug may be connected to the drive supply, which is separated from the charge stored in the capacitor only by semiconductor devices. A means must be provided for automatically isolating the plug from the drive - e.g. a contactor, or the use of shrouded pins.

It is recommended to remove the EMC filter disconnect screw and fit a type B RCD fitted on the drive side of the plug.

1.5 Mechanical hazards

In any application where a malfunction of the drive or its control system could lead to or allow damage, loss, or injury, a risk analysis must be carried out, and where necessary, further measures taken to reduce the risk. For example, an over-speed protection device in case of failure of the speed control, or a fail-safe mechanical brake in case of loss of motor braking. None of the drive functions should be used to ensure safety of personnel.

1.6 Motor

The safety of the motor under variable speed conditions must be ensured. To avoid the risk of physical injury, do not exceed the maximum specified speed of the motor.

Low speeds may cause the motor to overheat because the cooling fan becomes less effective, causing a fire hazard. The motor should be installed with a protection thermistor. If necessary, an electric forced vent fan should be used.

The values of the motor parameters set in the drive affect the protection of the motor. The default values in the drive must not be relied upon. It is essential that the correct value is entered in the Motor Rated Current parameter from the motor nameplate.

The drive has electronic motor overload protection and typical overloads are 150 % for 60 s (from cold) or 150 % for 8 s (from hot). The protection includes speed sensitivity and thermal memory retention through power cycle and disable. See *Thermal Protection Action* (**P3.21**) for details.

1.7 Adjusting parameters

Some parameters have a profound effect on the operation of the drive e.g. enable auto restart. They must not be altered without careful consideration of the impact on the controlled system and should be conducted by qualified personnel. Measures must be taken to prevent unwanted changes due to error or tampering e.g. set *Security PIN* (**P4.02**) or use a locked enclosure.

1.8 Electromagnetic compatibility (EMC)

Installation instructions for a range of EMC environments are provided in this User Guide. If the installation is poorly designed or other equipment does not comply with suitable standards for EMC, the product might cause or suffer from disturbance due to electromagnetic interaction with other equipment. It is the responsibility of the installer to ensure that the equipment or system into which the product is incorporated complies with the relevant EMC legislation in the place of use.

1.9 Grounding

The drive must be grounded by a conductor(s) sufficient to carry the prospective fault current in the event of a fault and in a zone of equipotential bonding. The ground loop impedance must conform to the requirements of local safety regulations.

CAUTION

Touch current in the protective earthing conductor exceeds 3.5 mA.

If the EMC filter disconnect screw is fitted (as delivered)

The protective earth shall be two conductors of the same cross-sectional area and material as the supply phases or the minimum size of the protective earthing conductor to comply with the local safety regulations for high protective earthing conductor current equipment.

Each protective earth conductor including the protective earth conductor to the motor must use a separate means of connection. Four tapped holes are provided (2 x M3 and 2 x M4). If the cable management bracket is used, then any additional protective earth conductors can be connected to the cable management bracket.

If aluminium cables are used, then the copper cross-sectional areas should be increased by 60 %.

If the EMC filter disconnect screw is removed

If the protective earth conductor is part of the supply cable, the cross section of the protective earth must have minimum area equivalent to the supply phases. If individual cores are used the protective earth should have a minimum cross section area of 2.5 mm² (if copper) with strain relief or 4 mm² (if copper) without strain relief or have a minimum area equivalent to the supply phase conductors whichever is the greatest.

1.10 Fuses and circuit breakers

The A.C. supply to the drive must be installed with suitable protection against overload to provide branch circuit protection in accordance with local safety regulations, e.g. the National Electrical Code (NEC), the Canadian Electrical Code. Failure to observe this requirement will cause a risk of fire.

The integral solid-state short circuit protection of the drive does not provide branch circuit protection. Branch circuit protection must be provided in accordance with the National Electrical Code and any additional local codes.

Opening or failure of the branch circuit protective device may be an indication that a fault has occurred and to reduce the risk of fire or electric shock, the equipment and the branch circuit protective device should be examined and tested and replaced if damaged.

1.11 RCD

CAUTION

This product can cause a D.C. current in the protective earthing conductor. Where a residual current-operated protective (RCD) or monitoring (RCM) device is used for protection in case of direct or indirect contact, only an RCD or RCM of Type B is allowed on the supply side of this product.

1.12 Safety of the control circuits

The drive is protective class I where user protection from electric shock is achieved through a combination of insulation and a protective ground.

The control terminals and 485 Communications port are isolated from the power circuits in the drive by double/reinforced insulation which meets the requirements for PELV. The installer must ensure that the external circuits do not compromise this insulation barrier. If the control circuits are to be connected to circuits classified as Safety Extra Low Voltage (SELV) - for example, to a personal computer - an additional basic barrier must be included in order to maintain the SELV classification.

1.13 Terminal connections and torque settings

Loose power connections are a fire risk. Always ensure that terminals are tightened to the specified torques. Refer to the tables in section 4 *Electrical installation*.

1.14 Environmental limits

Instructions in this guide regarding transport, storage, installation and use of the equipment must be complied with, including the specified environmental limits. This includes temperature, humidity, contamination, shock and vibration. Drives must not be subjected to excessive physical force.

1.15 Enclosure

The Basic Drive Module (BDM) must be mounted in an enclosure which prevents access except by trained and authorized personnel. The BDM is not a fire enclosure. The BDM is designed for use in an environment classified as pollution degree 2 by IEC 60664-1. This means that the environment within the enclosure must be dry, non-conducting contamination only. Any contamination must not obstruct air flow

1.16 Hazardous environments

The equipment must not be installed in a hazardous environment (e.g. a potentially explosive environment) unless it is installed in an approved enclosure and the installation is certified.

1.17 Access to equipment

Access must be restricted to authorized personnel only owing to the risk of electric shock and the risk of unintended changes to the system behaviour.

1.18 Routine maintenance

Regular inspections and maintenance should be carried out to ensure the reliability if the drive is maximized. See detailed information in section 3.5 *Routine maintenance*.

1.19 Repairs

Users must not attempt to repair a drive if it has failed, nor carry out fault diagnosis other than through the use of the diagnostic features described in this User Guide. It must be returned to an authorized Control Techniques distributor. Users must not make any attempt at removing drive plastics to inspect the internal parts of the drive.

1.20 Hazardous materials

RoHS, REACH WEEE etc. details are available at www.drive-setup.com/environment

2 Product information

2.1 Introduction

Commander S100 is a general-purpose drive that delivers maximum machine performance of induction motors for a range of applications. The voltage and power rating of the drive should be chosen to suit the mains supply and the induction motor to be controlled.

The default setting of drive parameters have been selected for the majority of use cases but can be adjusted to optimize the drive for a specific application.

The drive is fitted with a terminal cover which will need to be removed to wire the drive. Re-installing the terminal cover after wiring is optional on the Commander S100.

2.2 Marshal commissioning and diagnostic app

The Marshal app provides a rich interface for commissioning, cloning, and monitoring the drive. Marshal includes simple tools and setup wizards to configure the drive for an application and drive diagnostics.

Marshal is for use on smartphones and tablets that support NFC technology and is available from the Google Play store and the App Store. For details on compatible phones and using Marshal to commission the drive see section 5.1 *Marshal mobile app*.

Features

Commissioning

- Power off or on commissioning (even in the box)
- FastStart - assisted commissioning. Only 4 key steps to get up and running
- Easy to use setup tools for: motor settings, speed control, PID controller and input/output (I/O) functions
- Pre-set application configurations

Cloning

- Parameters can be easily transferred from one drive to another - just tap to write to as many drives as you want
- Back-up and restore parameter files

Share

- Share parameter files via Outlook, OneDrive, WhatsApp etc
- Shared parameter files are compatible with Marshal and Connect (PC Tool)
- Export parameter files to PDF format

Offline capabilities

- Create new parameter files
- Open existing projects to review/change parameters

Diagnostics

- Diagnostics available with power off or on
- Get support with drive alarms
- Error log & active error diagnostics
- Compare parameter settings to the factory defaults

Monitoring and Security

- Quick view of parameter settings and drive status
- Parameter access can be restricted via a Security PIN
- Quick visualisation of I/O, motor, and speed settings

2.3 Model number

The way in which the model numbers for the Commander S100 are formed is illustrated below:

Figure 2-1 Model number

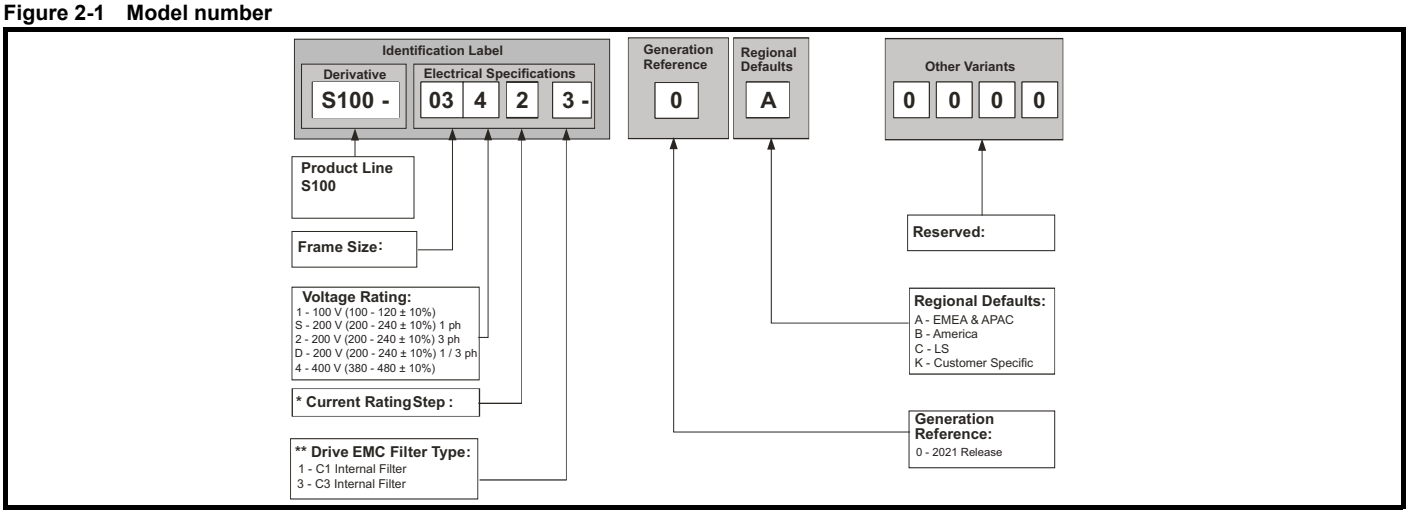

*The Current Rating Step is a unique identifier for drives with the same frame size and voltage rating.

**For more information about the internal EMC filters, see section 4.7 *Electromagnetic compatibility (EMC)* (EMC) and section 10.4 *Emission compliance*

2.4 Rating information

Figure 2-2 Drive rating information

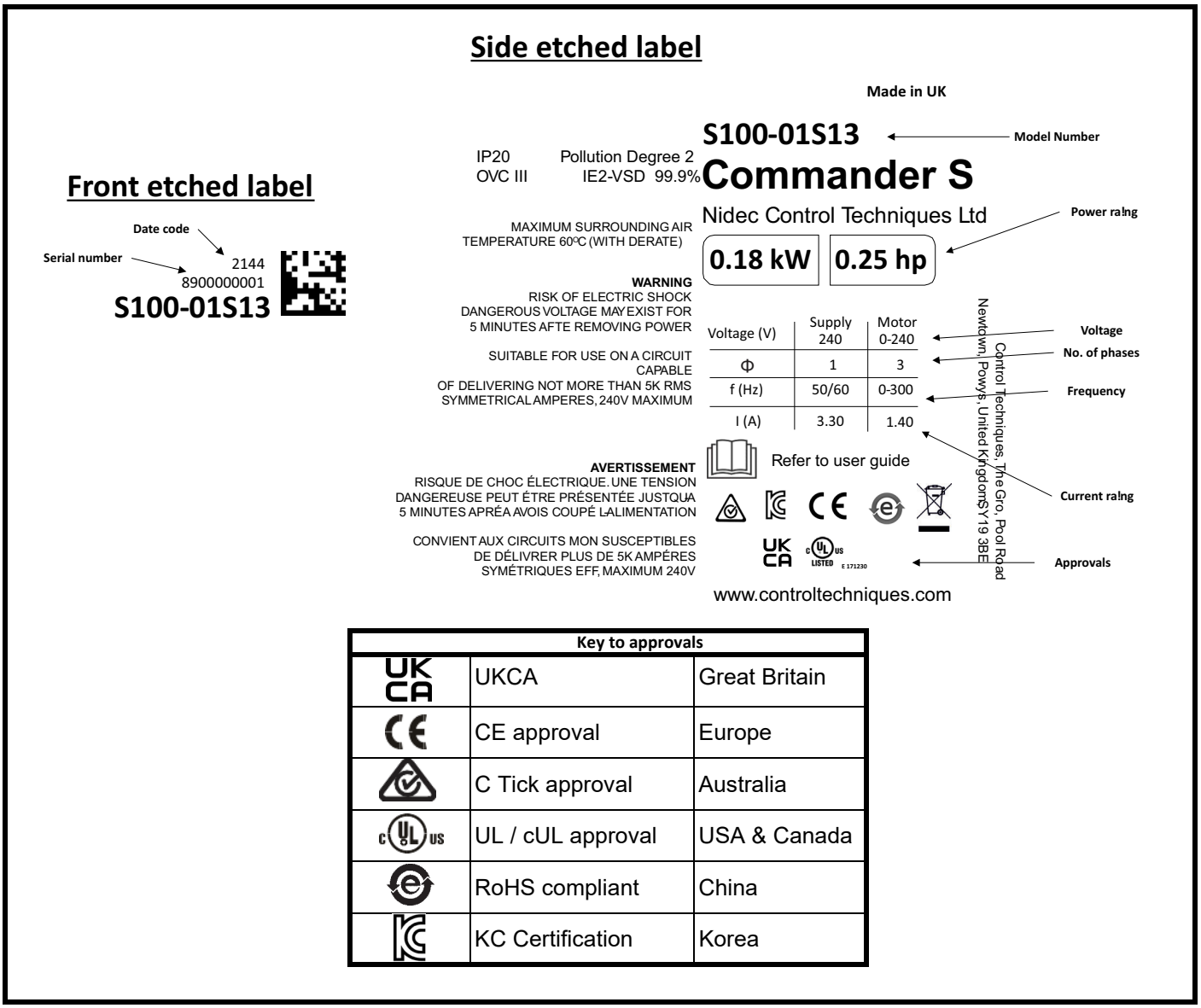

Key to approvals		
UK CA	UKCA	Great Britain
CE	CE approval	Europe
	C Tick approval	Australia
c UL us	UL / cUL approval	USA & Canada
	RoHS compliant	China
	KC Certification	Korea

2.5 Date code format

The date code is provided in a four digit format. The first two digits indicate the year and the remaining two digits indicate the week number (within the year).

Example:

A date code of **2110** would correspond to week 10 of year 2021.

2.6 Drive ratings

The continuous current ratings given below are for a maximum ambient temperature of 40 °C (104 °F), 1000 m altitude and frequency. Derating may be required for higher switching frequencies, at an ambient temperature > 40 °C (104 °F) and at higher altitude. For further information, refer to section 10 *Technical data*.

Table 2-1 100 V Drive ratings (100 to 120 V ±10 %)

Model	Supply Phases	Maximum Continuous Output Current	Peak Current	Nominal power at 200 V	Motor power at 200 V
		A	A	kW	hp
S100-01113	1	1.2	1.8	0.18	0.25
S100-01123	1	1.4	2.1	0.25	0.33
S100-01133	1	2.2	3.3	0.37	0.5
S100-03113	1	3.2	4.8	0.55	0.75
S100-03123	1	4.2	6.3	0.75	1
S100-03133	1	6	9	1.1	1.5

NOTE

The 100 V drive has a voltage doubler circuit on the input, therefore the rated output voltage is twice that of the supply and the motor used should have a rated voltage appropriate for this.

Table 2-2 200 V Drive ratings (200 to 240 V ±10 %)

Model	Supply Phases	Maximum Continuous Output Current	Peak Current	Nominal Power at 230 V	Motor power at 230 V
		A	A	kW	hp
S100-01S13	1	1.4	2.1	0.18	0.25
S100-01213	3	1.4	2.1	0.18	0.25
S100-02S11	1	1.2	1.8	0.18	0.25
S100-01S23	1	1.6	2.4	0.25	0.33
S100-01223	3	1.6	2.4	0.25	0.33
S100-02S21	1	1.4	2.1	0.25	0.33
S100-01S33	1	2.4	3.6	0.37	0.5
S100-01233	3	2.4	3.6	0.37	0.5
S100-02S31	1	2.2	3.3	0.37	0.5
S100-01S43	1	3.5	5.25	0.55	0.75
S100-02S41	1	3.2	4.8	0.55	0.75
S100-01243	3	3.5	5.25	0.55	0.75
S100-01S53	1	4.6	6.9	0.75	1
S100-01253	3	4.6	6.9	0.75	1
S100-02S51	1	4.2	6.3	0.75	1
S100-01D63	1 / 3	6.6	9.9	1.1	1.5
S100-02S61	1	6	9	1.1	1.5
S100-01D73	1 / 3	7.5	11.25	1.5	2
S100-02S71	1	6.8	10.2	1.5	2
S100-03D13	1 / 3	10.6	15.9	2.2	3

Table 2-3 400 V Drive ratings (380 to 480 V ±10 %)

Model	Supply Phases	Maximum Continuous Output Current	Peak Current	Nominal Power at 400 V	Motor power at 460 V
		A	A	kW	hp
S100-02413	3	1.2	1.8	0.37	0.5
S100-02423	3	1.7	2.55	0.55	0.75
S100-02433	3	2.2	3.3	0.75	1
S100-02443	3	3.2	4.8	1.1	1.5
S100-02453	3	3.7	5.55	1.5	2
S100-02463	3	5.3	7.95	2.2	3
S100-03413	3	7.2	10.8	3	3
S100-03423	3	8.8	13.2	4	5
S100-04413	3	13	19.5	5.5	7.5
S100-04423	3	16	24	7.5	10
S100-04433	3	23	34.5	11	15

2.6.1 Drive overload limits

Typical short-term overload limits

The drive is rated to supply 150 % output current as an overload, such as when the motor is accelerating. During overload conditions, the internal drive components get hot which limits the potential time the overload can be sustained.

Typical values are shown in the table below:

Starting Condition	**From Cold (No previous output current)**	**From Hot (Operating at 100 % output current)**
Drive Output Current	150 % for 60 s	150 % for 8 s

CAUTION

The thermal protection may, in some cases, allow the drive to exceed these ratings. It is not recommended to run beyond the rating of the drives as that will reduce the lifetime of the product and potentially void the warranty.

2.7 Motor sizing

The motor rated current generally should not exceed the maximum continuous output current of the drive as listed in Table 2-1 to Table 2-3.

The maximum output voltage of the drive is not able to exceed the input voltage, except for 100 V drive which use a voltage doubler to give 200 V output. The rated voltage of the motor should be similar to the output voltage of the drive. Motors can often be configured for different voltage ranges e.g. (star wye) or delta configuration of the windings. Ensure the configuration matches the drive and supply voltages.

The drive will initiate an error if the drive output current exceeds the over-current threshold, which could occur in the event of a short circuit of the motor output cables. The over-current threshold is the maximum current the drive can measure.

2.8 Drive features

The drive is fitted with a terminal cover which will need to be removed to wire the drive. Re-installing the terminal cover after wiring is optional on the Commander S100.

Figure 2-3 Removing / installing the terminal cover

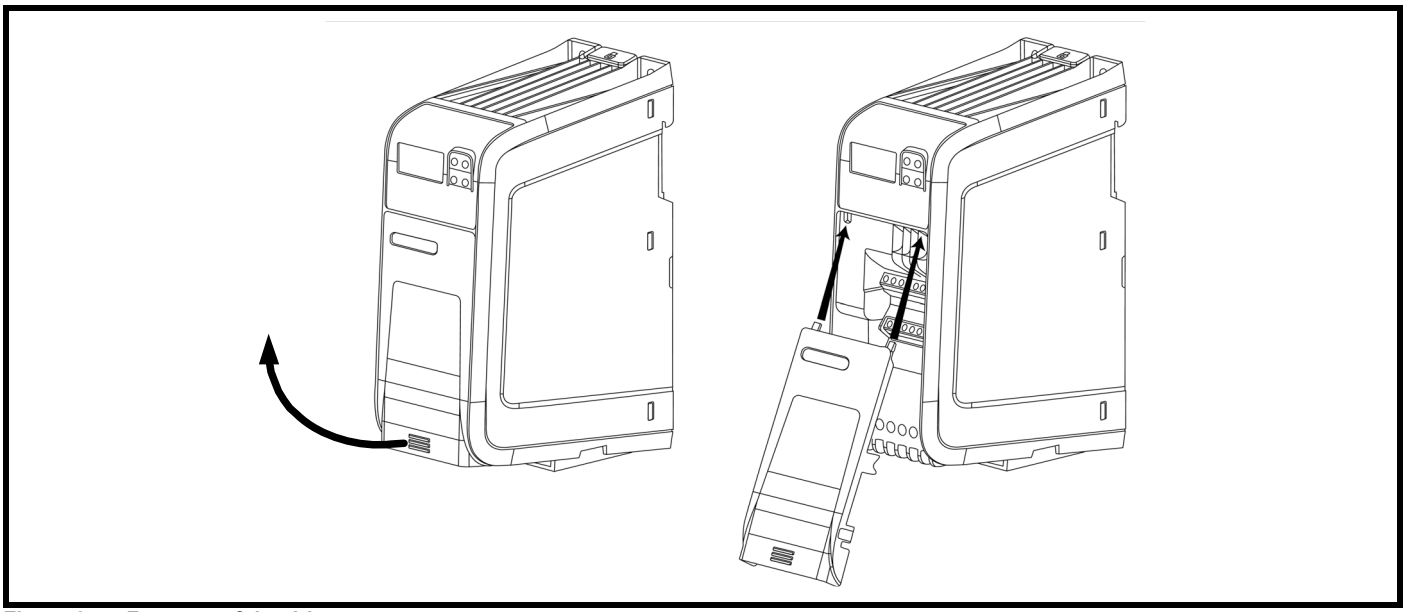

Figure 2-4 Features of the drive

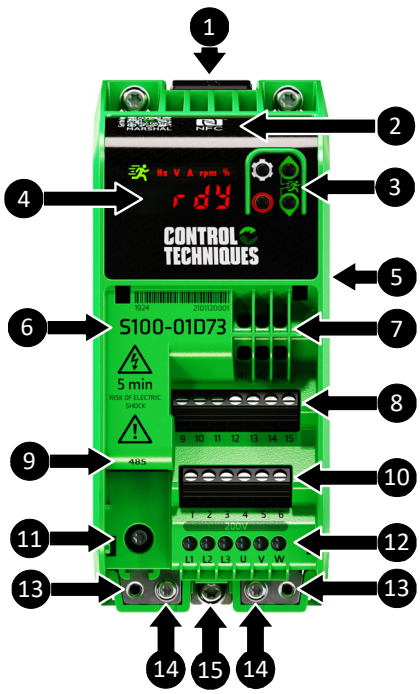

Key

1. DIN Rail Release
2. NFC Reader Location
3. Keypad
4. Display
5. Rating information (side of drive)*
6. Model number
7. Relay connections
8. Digital IO Connections
9. 485 communication Port
10. Analog I/O connections
11. EMC filter disconnect Screw **
12. A.C. supply and motor connections
13. Cable management bracket attachment points / alternative ground connections (2 x size M3 screws not provided)
14. Ground (protective earth) connections (2 x M4 screws provided)
15. EMC backplate screw

*Always check the drive voltage rating is suitable for the installation

**Read information in section 4 *Electrical installation* before removal.

2.8.1 Items supplied with the drive

Table 2-4 Items supplied with the drive

Description	Further Details
2 x 8 mm M4 (Phillips/Slotted)	These screws should be used to attach the ground cable as covered in section *For dual-rated drives (S100-xxDxx), single phase connections should be made to L1 and L2.*.

Table 2-5 Accessories

Name		Control Techniques Part Number	Further Details
Remote IP 66 Keypad		82500000000001	Remote LCD keypad rated at IP66.
Cable Management Bracket		3470-0207	Bracket that can be used to ground cable screens and allow for improved cable management. Supplied with two 6 mm M3 (Phillips/Slotted) screws for installation.
CT Comms Cable		4500-0096	Connects to the drive 485 port to allow communication to the PC. This is required for use with software such as Connect and CT Scope.
HMI		ESMART04-MCH040 ESMART07M-MCH070	Programmable display connected over MODBUS RTU.
Fibre Filter		3880-0008	Fibre filter to cover the fan intake and protect the drive against airborne fibres that can reduce the efficiency of the drive heatsink. This does not remove the need of additional filters on enclosure vents if the enclosure is in an environment where there are likely to be contaminants in the air.

3 Mechanical installation

This chapter describes how the drive is intended to be installed in an enclosure. Key features of this chapter include:

- Planning the installation
- Enclosure sizing and layout
- Drive dimensions
- Routine maintenance

NOTE

During installation it is recommended that the vents on the drive are covered to prevent debris (e.g. wire off-cuts) from entering the drive.

3.1 Planning the installation

The following considerations outlined in this section must be made when planning the installation.

3.1.1 Access

Access must be restricted to authorized personnel only. Safety regulations which apply at the place of use must be complied with.

3.1.2 Environmental protection

The drive must be protected from:

- Moisture, including dripping water, spraying water and condensation. An anti-condensation heater may be required, which must be switched off when the drive is running
- Contamination with electrically conductive material
- Contamination with any form of dust which may restrict the fan, or impair airflow over internal components
- Temperature beyond the specified operating and storage ranges
- Corrosive gasses
- Excessive vibration

3.1.3 Hazardous areas

The drive must not be located in a classified hazardous area unless it is installed in an approved enclosure and the installation is certified.

3.1.4 Cooling

The heat produced by the drive must be removed without its specified operating temperature being exceeded. Note that a sealed enclosure gives substantially reduced cooling compared with a ventilated one, and may need to be larger and/or use internal air circulating fans.

For further information, refer to section 3.3.1 *Enclosure sizing*.

3.1.5 Fire protection

The drive enclosure is not classified as a fire enclosure. A separate fire enclosure must be provided.

For installation in the USA, a NEMA 12 enclosure is suitable.

For installation outside the USA, the following (based on IEC 62109-1, standard for PV inverters) is recommended:

Enclosure can be metal and/or polymeric. Polymer enclosures must meet at least UL 94 class 5VB at the point of minimum thickness.

Air filter assemblies to be at least class V-2.

Unless mounting in an enclosed electrical operating area (restricted access) with concrete floor, the area outlined in Figure 3-1 (the bottom and sides of the enclosure within 5° marked ❶) must be designed to prevent escape of burning material - either by having no openings or by having a baffle construction.

Figure 3-1 Fire enclosure bottom layout

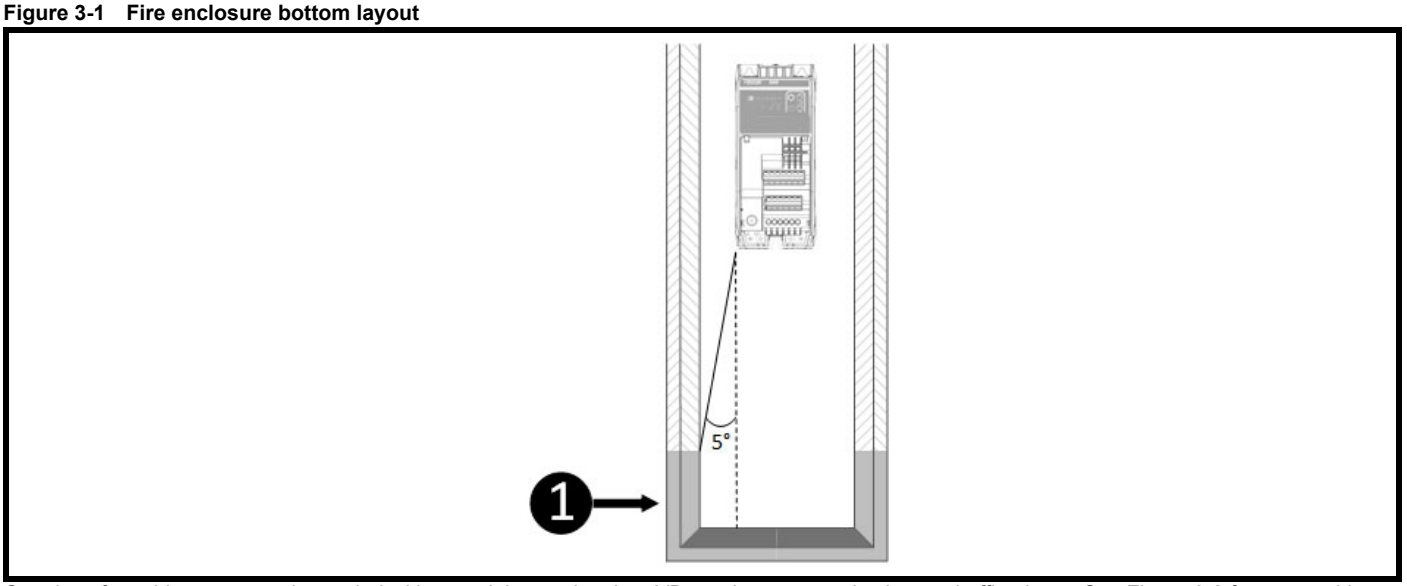

Openings for cables etc. must be sealed with materials meeting the 5VB requirement, or else have a baffle above. See Figure 3-2 for acceptable baffle construction. The distance below the drive where this applies to the enclosure wall = Distance from the cabinet wall to the drive ÷ 0.0875.

Figure 3-2 Fire enclosure baffle construction

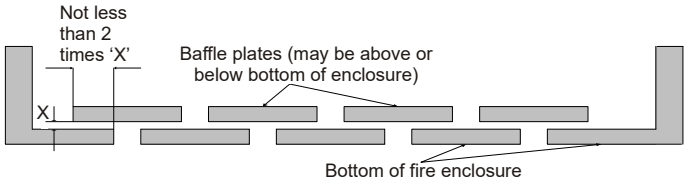

3.2 Drive dimensions and mounting

3.2.1 DIN rail mounting

The DIN rail mounting mechanism has been designed so no tools are required to install and remove the drive from a DIN rail. To install the drive on the DIN rail:

1. Press the DIN rail release
2. Position the top mounting lugs correctly on the DIN rail
3. Ensure drive is secure before releasing the DIN rail clip
4. Install DIN rail end stops either side of the drive to prevent lateral movement

The DIN rail (TS35) used should be 7.5 mm (0.3 in) to conform to ISO/EN 60715. Dimensions from the top of the drive to the DIN rail center can be found in Table 3-1.

No additional screws are required to support the drive when it is installed on a DIN rail. However, if the drive is to be installed on a residential supply or near sensitive equipment it may be required that the EMC backplate screw (bottom-central) be installed to ensure direct-metal contact between the drive and cabinet. See section section 4.7 *Electromagnetic compatibility (EMC)*.

Figure 3-3 DIN rail release location

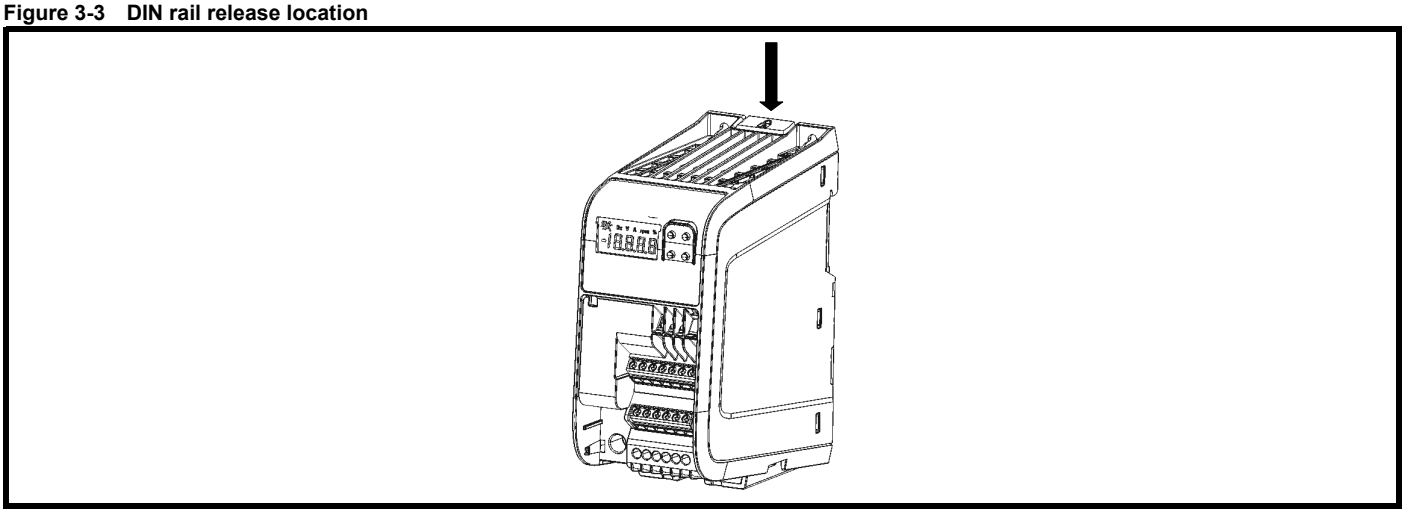

Figure 3-4 Dimensions

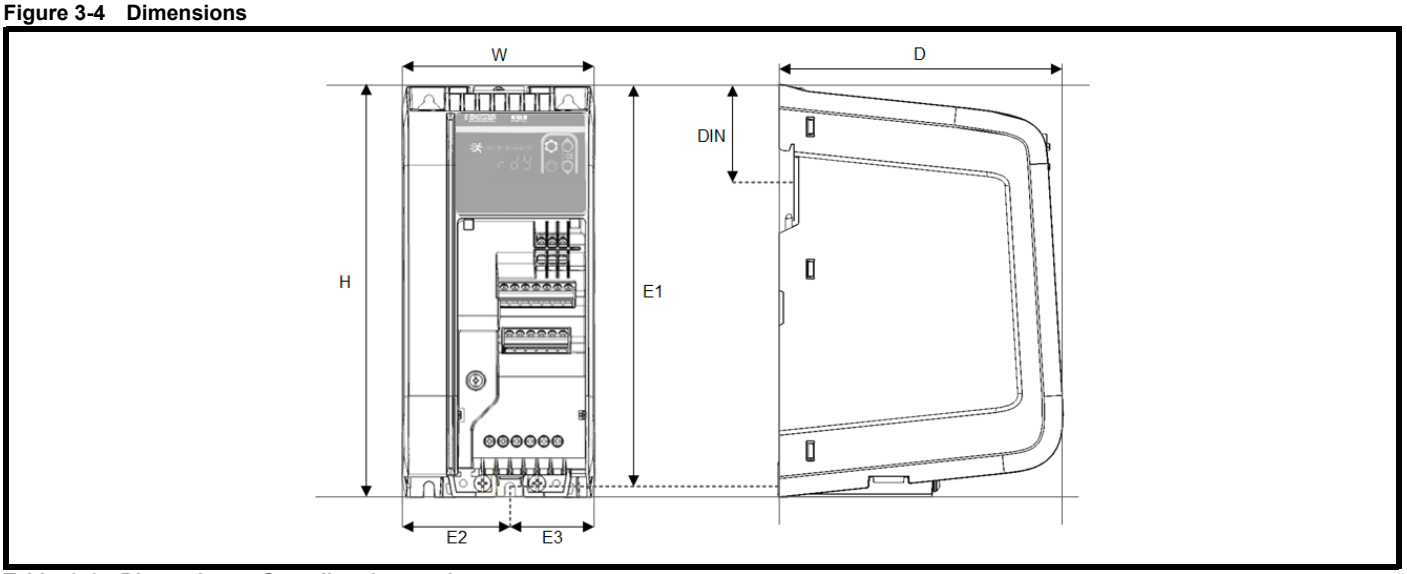

Table 3-1 Dimensions - Overall and mounting

Model Number	DIN	H	D	E1	W	E2	E3	Mounting Hole Diameter
	mm (in)	mm (in)	mm (in)	mm (in)	mm (in)	mm (in)	mm (in)	mm (in)
S100-01	46 (1.81)	156 (6.14)	130 (5.12)	152 (5.99)	68 (2.70)	34 (1.34)	34 (1.34)	4.8 (0.19)
S100-02	46 (1.81)	192 (7.56)	132 (5.20)	187 (7.36)	68 (2.70)	34 (1.34)	34 (1.34)	4.8 (0.19)
S100-03	46 (1.81)	192 (7.56)	132 (5.20)	187 (7.36)	90 (3.54)	50 (2.17)	40 (1.77)	4.8 (0.19)
S100-04	N/A	264 (10.4)	160 (6.3)	260 (10.24)	115 (4.53)	107 (4.21)	7.87 (0.31)	5.3 (0.21)

NOTE

The EMC backplate screw is located slightly off centre on the frame size 3 drive (S100-03).

3.2.2 Mounting on a backplate

The following drawings show the dimensions of the drive and mounting holes to allow a backplate to be prepared. A drill template for wall mounting is included on the drive packaging for quick installation.

Figure 3-5 Mounting dimensions

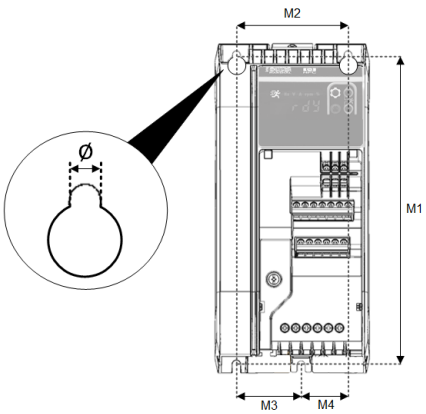

NOTE

Fourth mounting hole in the bottom left corner is only found on S100-03 and S100-04 drives.

Table 3-2 Mounting dimensions and torque settings

Model Number	M1		M2		M3		M4		∅		Torque setting	
	mm	in	mm	in	mm	in	mm	in	mm	in	Nm	lb in
S100-01	145	5.71	45	1.77	22	0.89	22	0.89	4.8	0.19	1.5	13.28
S100-02	180	7.11	45	1.77	22	0.89	22	0.89	4.8	0.19	1.5	13.28
S100-03	180	7.11	65	2.56	37	1.48	27	1.06	4.8	0.19	1.5	13.28
S100-04	253	9.96	99	3.90	99	3.90	0	0	5.36	0.21	1.5	13.28

3.3 Enclosure dimensions

Please observe the clearances in Figure 3-6 taking into account any appropriate notes for other devices / auxiliary equipment when planning the installation.

NOTE

Cables should be routed carefully to ensure that the airflow in and out of the product is not impeded.

Figure 3-6 Enclosure layout

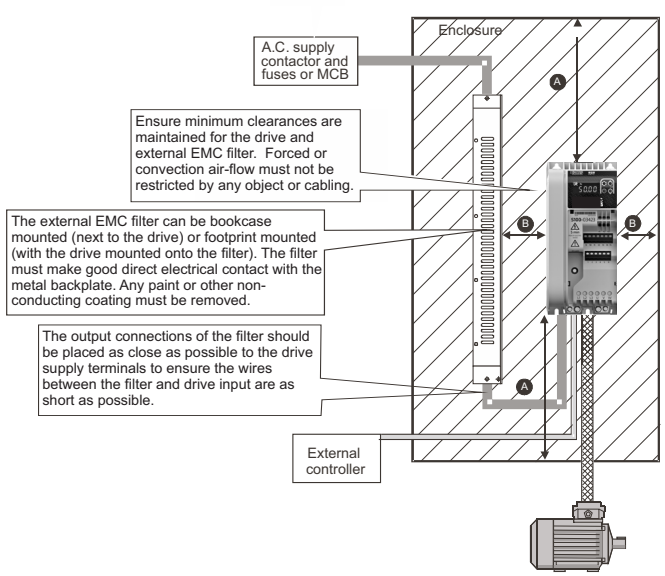

Table 3-3 Drive clearances

Drive Clearances	S100-01x13, S100-01x23	All other drives
A	100 mm (3.94 in)	45 mm (1.77 in)
B	0 mm (0 in)	

3.3.1 Enclosure sizing

Correctly sizing an enclosure for the drive is an important aspect of the installation process and if over-looked can cause the enclosure temperature to rise excessively making the drive less efficient. The calculations for sizing an enclosure are based on the total heat dissipation of the equipment inside the enclosure which can be calculated as follows:

1. Add the dissipation figures from section 10.2 *Power dissipation* for each drive that is to be installed in the enclosure.
2. Calculate the total heat dissipation (in Watts) of any other equipment (such as EMC filters) to be installed in the enclosure.
3. Add the heat dissipation figures obtained above. This gives a figure in Watts for the total heat that will be dissipated inside the enclosure.

Follow the equations below to calculate the minimum required unobstructed surface area and the minimum air-flow required. Select the enclosure (cabinet) and enclosure fan based on the values produced.

3.3.1.1 Calculating the size of a sealed enclosure

The enclosure transfers internally generated heat into the surrounding air by natural convection (or external forced air flow); the greater the surface area of the enclosure walls, the better is the dissipation capability. Only the surfaces of the enclosure that are unobstructed (not in contact with a wall or floor) can dissipate heat.

Calculate the minimum required unobstructed surface area $\mathbf{A_e}$ for the enclosure from:

$$A_e = \frac{P}{k(T_{int} - T_{ext})}$$

Where:

$\mathbf{A_e}$ = Unobstructed surface area in m^2 (1 m^2 = 10.9 ft^2)

P = Power in Watts dissipated by *all* heat sources in the enclosure

k = Heat transmission coefficient of the enclosure material in $W/m^2/°C$

Typical values of heat transmission:

- Polypropylene PP: *0.1 - 0.22*
- Stainless steel: *16 - 24*
- Aluminium: *205 - 250*

$\mathbf{T_{int}}$ = Maximum permissible temperature in °C inside the enclosure

$\mathbf{T_{ext}}$ = Maximum expected temperature in °C outside the enclosure

3.3.1.2 Calculating the air-flow in a ventilated enclosure

The dimensions of the enclosure are required only for accommodating the equipment. The equipment is cooled by the forced air flow.

Calculate the minimum required volume of ventilating air from:

$$V = \frac{3kP}{T_{int} - T_{ext}}$$

Where:

V = Air-flow in m^3 per hour (1 m^3/hr = 0.59 ft^3/min)

P = Power in Watts dissipated by *all* heat sources in the enclosure

$\mathbf{T_{int}}$ = Maximum permissible temperature in °C inside the enclosure

$\mathbf{T_{ext}}$ = Maximum expected temperature in °C outside the enclosure

k = Ratio of $\frac{P_0}{P_I}$

Where:

- **P0** is the air pressure at sea level
- **PI** is the air pressure at the installation

Typically, a factor of 1.2 to 1.3 can be used. This will allow for any pressure drops in dirty air-filters.

3.3.1.3 Enclosure design and drive ambient temperature

Drive derating is required for operation in high ambient temperatures.

Totally enclosing the drive in either a sealed cabinet (no airflow) or in a well-ventilated cabinet makes a significant difference on drive cooling.

The chosen method affects the ambient temperature value (T_{rate}) which should be used for any necessary derating to ensure sufficient cooling for the whole of the drive.

The ambient temperature for the four different combinations is defined below:

1. Totally enclosed with no air flow (<2 m/s) over the drive $T_{rate} = T_{int} + 5$ °C
2. Totally enclosed with air flow (>2 m/s) over the drive $T_{rate} = T_{int}$

Where:

T_{int} = Temperature inside the cabinet

T_{rate} = Temperature used to select current rating from tables in section 10 *Technical data*.

3.4 Drive fan operation

S100-01x13 and S100-01x23 drive are cooled by natural convection. All other drives are ventilated by an internally controlled fan that will turn on when required to keep the drive cool.

Ensure the minimum clearances around the drive are maintained to allow air to flow freely.

3.5 Routine maintenance

Regular checks of the following should be carried out to ensure the drive reliability is maximized:

Table 3-5 Routine maintenance

Environment	
Ambient temperature	Ensure the enclosure temperature remains at or below maximum specified.
Dust	Ensure the drive remains dust free. The lifetime of the fan is reduced in dusty environments. If the fibre filter accessory is used, ensure it remains clear and free of dust.
Moisture	Ensure the drive enclosure shows no signs of condensation. If moisture is discovered, an anti-condensation heater may be required which must be switched off when the drive is running to prevent excess heating.
Enclosure	
Enclosure particle filters	Ensure filters are not blocked and that air is free to flow in and out of the enclosure.
Electrical	
Screw connections	Ensure all screw terminals remain tight
Crimp terminals	Ensure all crimp terminals remain tight – check for any discoloration which could indicate overheating
Cables	Check all cables for signs of damage
Ground connections	Must be inspected and tested at appropriate intervals

4 Electrical installation

This chapter covers information relevant to the electrical installation of the product. This includes but is not limited to:

- Supply, motor and ground connections
- Torque settings
- Cable sizes
- Fuse & MCB selection
- Supply requirements and optional line reactor selection
- Ground leakage, touch currents and RCDs
- Electromagnetic compatibility (EMC)
- Control connections

WARNING

Before proceeding ensure all of the warnings in section 1 *Safety information*. have been read and are understood.

Power Terminals (S100-034xx and S100-04xxx): 4 mm (5/32 in) flat-blade screwdriver
Power Terminals (all other models): 3 mm (1/8 in) flat-blade screwdriver
Control Terminals (all models): 3 mm (1/8 in) flat-blade screwdriver

4.1 Power connections

4.1.1 Single phase supply connections

Figure 4-1 Single phase power connections

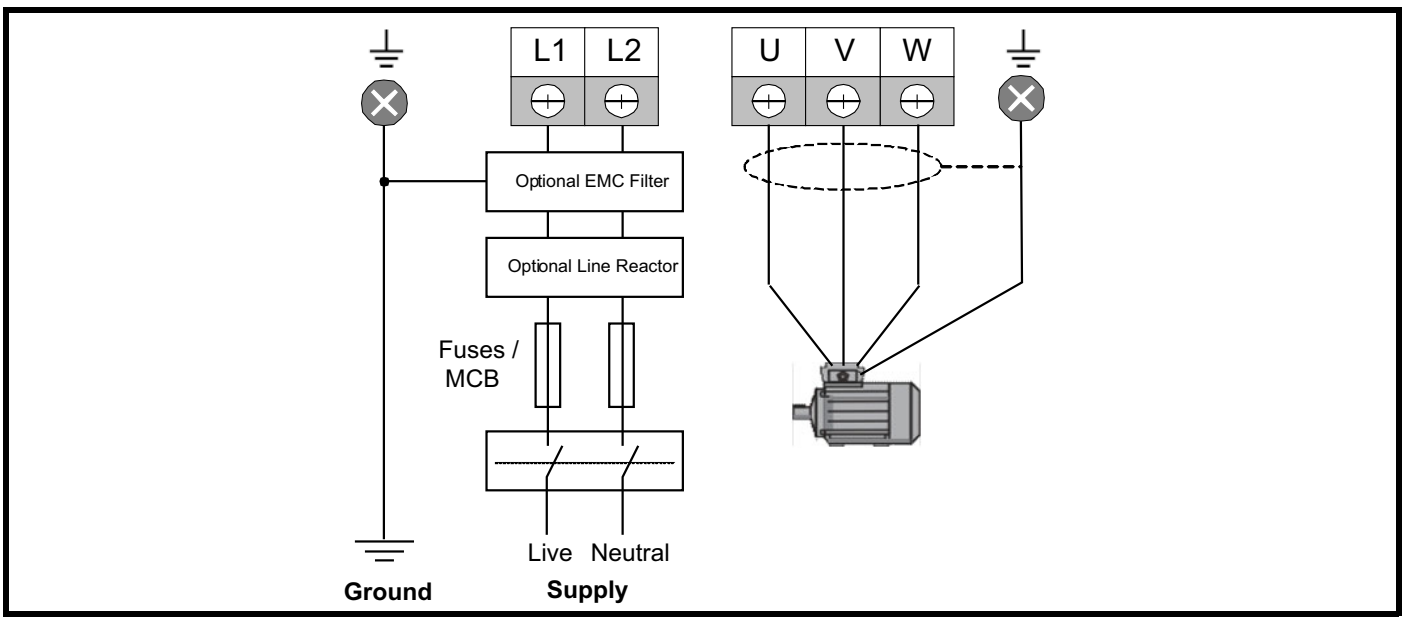

For dual-rated drives (S100-xxDxx), single phase connections should be made to L1 and L2.

4.1.2 Three phase supply connections

Figure 4-2 Three phase power connections

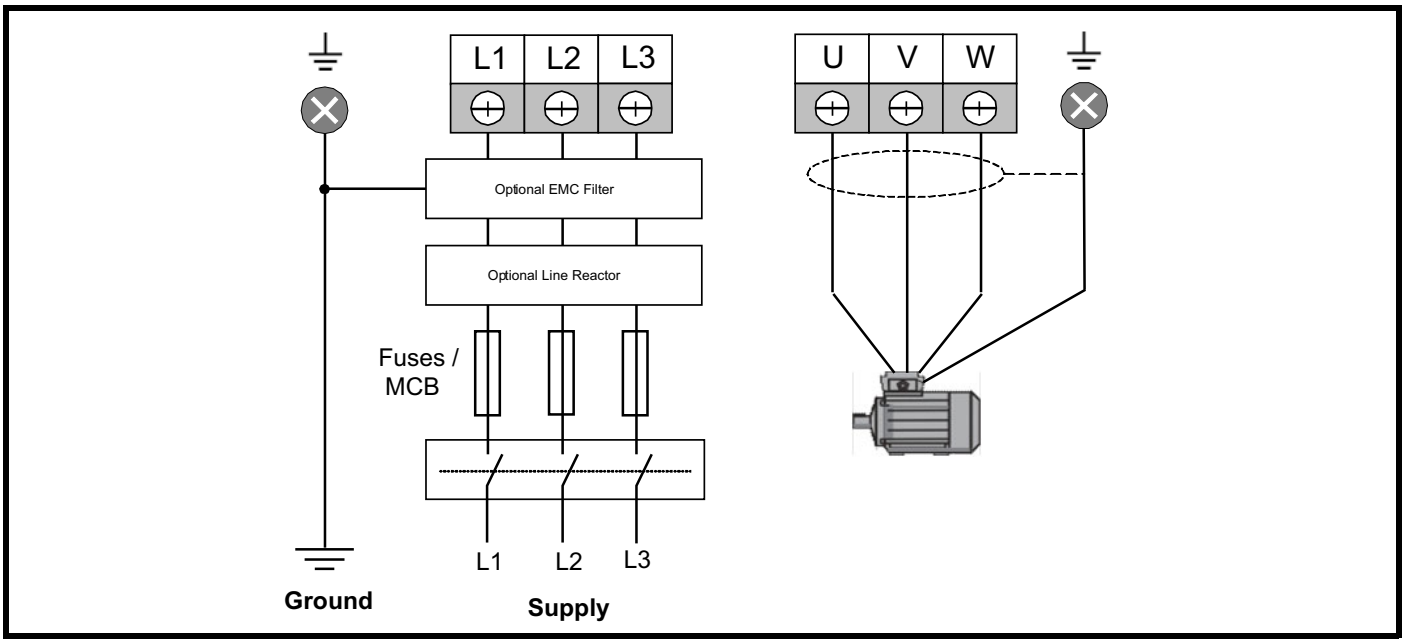

For dual-rated drives (S100-xxDxx), single phase connections should be made to L1 and L2.

4.1.3 Ground connections

The supply and motor ground connections are made using the ground busbar located at the bottom of the drive as shown in Figure 4-3. The drive must be connected to the system ground of the A.C. supply. The ground wiring must conform to local regulations and codes of practice.

Figure 4-3 Ground connections (Size 1 shown)

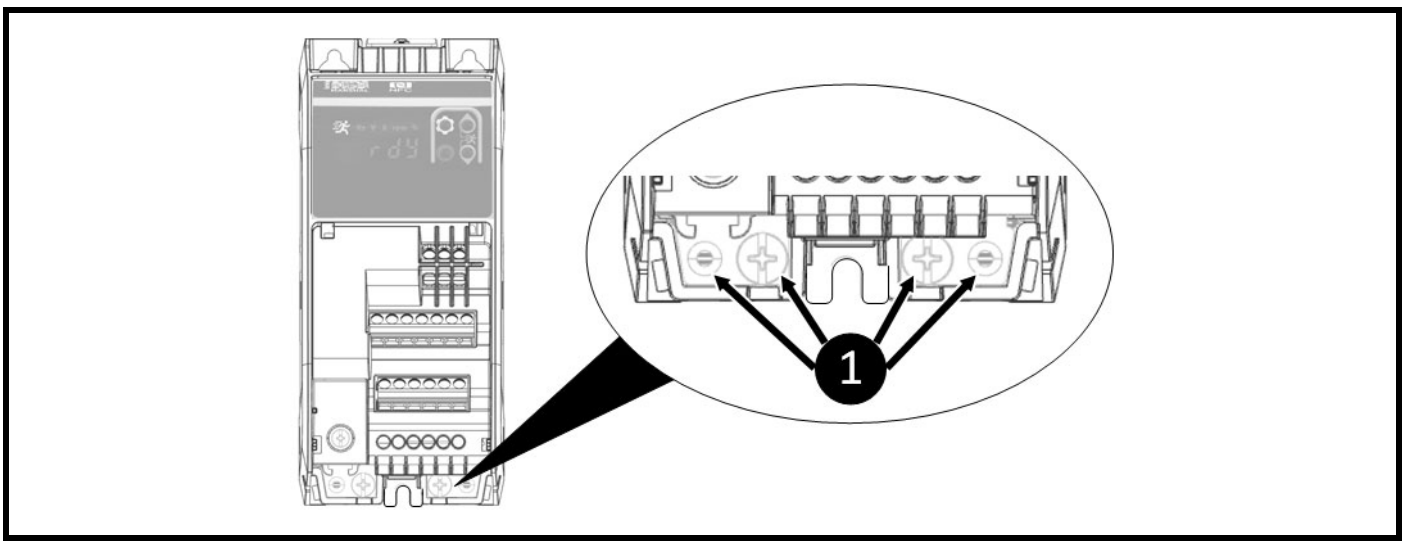

WARNING

The ground loop impedance must conform to the requirements of local safety regulations. The drive must be grounded by a connection capable of carrying the prospective fault current until the protective device (fuse, MCB) disconnects the A.C. supply. The ground connections must be inspected and tested at appropriate intervals.

4.1.4 Protective ground cable ratings

Minimum ground conductor size

Two copper conductors of the same cross-sectional area as the input phase conductor.

If the drive is connected via a plug/socket conforming to IEC60309 then a single protective earthing conductor of at least 2.5 mm^2 as part of a multi-conductor cable with adequate strain relief is permitted.

4.2 Terminal torque settings

To avoid a fire hazard and maintain validity of the UL listing, adhere to the specified tightening torques for all terminals.

Table 4-1 Drive power terminal torque settings

Drive Voltage Rating		100 V	200 V	400 V
Recommended Torque Setting	Power Connections	0.5 Nm (4.4 lb in)		0.6 Nm (5.3 lb in)
	Ground Connections	1.5 Nm (13.3 lb in)		
	Control Connections (Including Relay)	0.4 Nm (3.5 lb in)		

4.3 Cable selection

IEC cable sizes assume copper conductor, PVC insulation, installation method B2 and ambient temperature of 40 °C (104 °F). For UL, cables must be rated for 60 °C (140 °F) operation and copper only. Cables must be provided with mechanical protection against damage and be rated for a voltage in excess of the maximum supply voltage.

CAUTION

The nominal cable sizes below are for guidance only. The mounting and grouping of cables will affect their current-carrying capacity, in some cases smaller cables may be acceptable but in other cases a larger cable is required to avoid excessive temperature or voltage drop. Refer to local wiring regulations for the correct size of cables.

Table 4-2 Cable ratings (100 V Drive)

Model Number	Supply Phases	Cables IEC60364-5-52 mm²				UL61800-5-1 AWG			
		Supply		Motor		Supply		Motor	
		Nominal	Maximum	Nominal	Maximum	Nominal	Maximum	Nominal	Maximum
S100-01113	1	1.5	2.5	1.5	2.5	24	12	24	12
S100-01123	1	1.5	2.5	1.5	2.5	24	12	24	12
S100-01133	1	1.5	2.5	1.5	2.5	22	12	22	12
S100-03113	1	2.5	6	1.5	2.5	20	8	20	12
S100-03123	1	2.5	6	1.5	2.5	18	8	18	12
S100-03133	1	6††	6	1.5	2.5	16	8	16	12

Table 4-3 Cable ratings (200 V Drive)

Model Number	Supply Phases	Cables IEC60364-5-52 mm²				UL61800-5-1 AWG			
		Supply		Motor		Supply		Motor	
		Nominal	Maximum	Nominal	Maximum	Nominal	Maximum	Nominal	Maximum
S100-01S13	1	1.5	2.5	1.5	2.5	24	12	24	12
S100-01213	3	1.5	2.5	1.5	2.5	24	12	24	12
S100-02S11	1	1.5	2.5	1.5	2.5	24	12	24	12
S100-01S23	1	1.5	2.5	1.5	2.5	24	12	24	12
S100-01223	3	1.5	2.5	1.5	2.5	24	12	24	12
S100-02S21	1	1.5	2.5	1.5	2.5	24	12	24	12
S100-01S33	1	1.5	2.5	1.5	2.5	22	12	22	12
S100-01233	3	1.5	2.5	1.5	2.5	22	12	22	12
S100-02S31	1	1.5	2.5	1.5	2.5	22	12	22	12
S100-01S43	1	1.5	2.5	1.5	2.5	20	12	20	12
S100-01243	3	1.5	2.5	1.5	2.5	20	12	20	12
S100-02S41	1	1.5	2.5	1.5	2.5	20	12	20	12
S100-01S53	1	1.5	2.5	1.5	2.5	18	12	18	12
S100-01253	3	1.5	2.5	1.5	2.5	18	12	18	12
S100-02S51	1	1.5	2.5	1.5	2.5	18	12	18	12
S100-01D63	1	2.5†	2.5	1.5	2.5	16	12	16	12
	3	1.5	2.5	1.5	2.5	16	12	16	12
S100-02S61	1	2.5†	2.5	1.5	2.5	16	12	16	12
S100-01D73	1	2.5†	2.5	1.5	2.5	16	12	14	12
	3	2.5†	2.5	1.5	2.5	16	12	14	12
S100-02S71	1	2.5†	2.5	1.5	2.5	16	12	14	12
S100-03D13	1	4	6	1.5	2.5	14	8	14	12
	3	4	6	1.5	2.5	14	8	14	12

NOTE

Cables marked † need to be rated for 90 °C and 1.5 mm^2 in order to terminate with a ferrule.

Cables marked †† need to be rated for 90 °C and 4 mm^2 in order to terminate with a ferrule.

Table 4-4 Cable ratings (400 V Drive)

Model Number	Supply phases	Cables IEC60364-5-52 mm²				UL61800-5-1 AWG			
		Supply		Motor		Supply		Motor	
		Nominal	Maximum	Nominal	Maximum	Nominal	Maximum	Nominal	Maximum
S100-02413	3	1.5	4	1.5	4	24	10	24	10
S100-02423	3	1.5	4	1.5	4	22	10	22	10
S100-02433	3	1.5	4	1.5	4	22	10	22	10
S100-02443	3	1.5	4	1.5	4	20	10	20	10
S100-02453	3	1.5	4	1.5	4	20	10	20	10
S100-02463	3	1.5	4	1.5	4	18	10	18	10
S100-03413	3	2.5	4	1.5	4	16	10	16	10
S100-03423	3	2.5	4	1.5	4	14	10	14	10
S100-04413	3	6††	6	2.5	6	10	8	12	8
S100-04423	3	4	6	2.5	6	10	8	12	8
S100-04433	3	6††	6	4	6	10	8	10	8

NOTE

The nominal motor cable sizes assume that the motor maximum current matches that of the drive. Where a motor of reduced rating is used the cable rating may be chosen to match that of the motor. To ensure that the motor and cable are protected against overload, the drive must be programmed with the correct motor rated current. A fuse or other protection must be included in all live connections to the A.C. supply.

Table 4-5 Terminal maximum cable size

Drive Voltage Rating		100 V, 200 V			400 V	
Drive Frame Size		S100-01, S100-02	S100-03		S100-04	All Frame Sizes
Maximum Cable Size	Supply Terminals	2.5 mm² (12 AWG)	6 mm² (8 AWG)		6 mm² (8 AWG)	4 mm² (10 AWG)
	Motor Output Terminals		2.5 mm² (12 AWG)		6 mm² (8 AWG)	
	Ground Connections*	6 mm² (8 AWG)				
	Control Terminals (Including Relay)	1.5 mm² (16 AWG)				

*This is per connection, so with two ground connections the maximum total cable size is 12 mm².

4.3.1 Cable lengths

Since capacitance in the motor cable causes loading on the output of the drive, ensure the cable length does not exceed **50 m**. For motor lengths to comply to a particular EMC level, such as C1, refer to the cable lengths given in section 10.4 *Emission compliance*.

4.3.2 High capacitance / reduced diameter motor cables

The maximum cable length of 50 m must be reduced to 25 m if high capacitance or reduced diameter motor cables are used. Most cables have an insulating jacket between the cores and the armor or shield; these cables have a low capacitance and are recommended. (Figure 4-4 shows how to identify the two types).

Figure 4-4 Cable construction influencing the capacitance

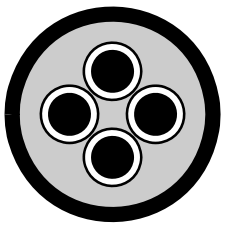

Normal capacitance
Shield or armor separated from the cores

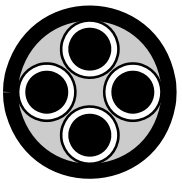

High capacitance
Shield or armor close to the cores

The maximum motor cable lengths specified in section 4.3.1 *Cable lengths*. are for cables that are shielded and contain four cores. Typical capacitance for this type of cable is 130 pF/m (i.e. from one core to all others and the shield connected together).

4.4 Fuse and MCB selection

The fuses and MCBs recommended below are maximum values to protect the recommended cables and prevent noise errors during normal operation. If smaller cables are used, smaller protection devices may be required.

The voltage rating of fuses and MCBs must be greater than or equal to the highest supply voltage of the system.

Table 4-6 Fuse and MCB selection

Model Number	Rated Current	Rated Power		Supply Phases	Max supply Current	IEC*		UL*	
						Fuses Class gG	MCB Type C	Fuses Class CC, J or T	MCB Type C
	A	kW	hp		A	A		A	
100 V Drive (100 to 120 V ±10 %)									
S100-01113	1.2	0.18	0.25	1	7.2	10	10	10	15
S100-01123	1.4	0.25	0.33	1	8.5	10	10	15	15
S100-01133	2.2	0.37	0.5	1	10.4	12	12	15	15
S100-03113	3.2	0.55	0.75	1	14.8	16	16	20	25
S100-03123	4.2	0.75	1	1	20.0	25	25	30	25
S100-03133	6	1.1	1.5	1	28.5	32	32	40	40
200 V Drive (200 to 240 V ±10 %)									
S100-01S13	1.4	0.18	0.25	1	3.3	6	6	6	15
S100-01213	1.4	0.18	0.25	3	2.0	4	6	6	15
S100-02S11	1.2	0.18	0.25	1	3.3	6	6	6	15
S100-01S23	1.6	0.25	0.33	1	3.8	6	6	6	15
S100-01223	1.6	0.25	0.33	3	2.3	4	6	6	15
S100-02S21	1.4	0.25	0.33	1	3.8	6	6	6	15
S100-01S33	2.4	0.37	0.5	1	4.7	6	6	6	15
S100-01233	2.4	0.37	0.5	3	2.8	4	6	6	15
S100-02S31	2.2	0.37	0.5	1	4.7	6	6	6	15
S100-01S43	3.5	0.55	0.75	1	8.0	10	10	10	15
S100-01243	3.5	0.55	0.75	3	4.7	6	6	6	15
S100-02S41	3.2	0.55	0.75	1	8.0	10	10	10	15
S100-01S53	4.6	0.75	1	1	9.5	12	12	15	15
S100-01253	4.6	0.75	1	3	5.7	8	8	10	15
S100-02S51	4.2	0.75	1	1	9.5	12	12	15	15
S100-01D63	6.6	1.1	1.5	1	15.3	16	20	20	20
				3	12.2	16	16	15	15
S100-02S61	6	1.1	1.5	1	15.3	16	20	20	20
S100-01D73	7.5	1.5	2	1	18.4	20	25	25	20
				3	14.3	16	16	20	20
S100-02S71	6.8	1.5	2	1	18.4	20	25	25	20
S100-03D13	10.6	2.2	3	1	26.1	32	32	35	30
				3	19.7	25	25	25	25
400 V Drive (380 to 480 V ±10 %)									
S100-02413	1.2	0.37	0.5	3	1.9	4	6	6	15
S100-02423	1.7	0.55	0.75	3	2.5	4	6	6	15
S100-02433	2.2	0.75	1	3	3.0	4	6	6	15
S100-02443	3.2	1.1	1.5	3	4.5	6	6	6	15
S100-02453	3.7	1.5	2	3	5.6	8	8	10	15
S100-02463	5.3	2.2	3	3	8.2	10	16	15	15
S100-03413	7.2	3	3	3	13.2	16	16	20	15
S100-03423	8.8	4	5	3	16.0	20	20	25	20
S100-04413	13	5.5	7.5	3	24.68	32	32	35	35
S100-04423	16	7.5	10	3	20.31	25	25	25	25
S100-04433	23	11	15	3	25.97	32	32	35	35

* For UL installations, the circuit breaker must be listed under category control number DIVQ / DIVQ7, rated 600 Vac with a short circuit rating > 5 kA. In other installations, circuit breakers compliant with EN IEC 60947-2 are recommended, with > 5 kA short circuit breaking capacity.

When protected by fuses or circuit breakers with maximum ratings as specified in Table 4-6, this product is suitable for use on a circuit capable of delivering not more than 5,000 RMS symmetrical amperes, 480 V maximum (up to the rated voltage of the drive module).

4.5 Supply requirements

Voltage:

100 V drive: 100 V to 120 V ±10 %

200 V drive: 200 V to 240 V ±10 %

400 V drive: 380 V to 480 V ±10 %

Maximum supply imbalance: 2 % negative phase sequence (equivalent to 3 % voltage imbalance between phases). Frequency range: 45 to 66 Hz

For UL compliance only, the maximum supply symmetrical fault current must be limited to 5 kA.

4.5.1 Supply types

All drives are suitable for use on any supply type i.e TN-S, TN-C-S, TT and IT except 480 V grounded delta.

Drives are suitable for use on supplies of overvoltage category III and lower, according to IEC/EN/KN/UL 61800-5-1. This means they may be connected permanently to the supply at its origin in a building, but for outdoor installation additional over-voltage suppression (transient voltage surge suppression) must be provided to reduce category IV to category III.

WARNING

Operation with IT (ungrounded) supplies:
Special attention is required when using internal or external EMC filters with ungrounded supplies, because in the event of a ground (earth) fault in the motor, the drive may not produce an error and the filter could be over-stressed. In this case, either the filter must not be used i.e. removed, or additional independent motor ground fault protection must be provided. For instructions on removal, refer to Figure 4-13 *Disconnecting the internal EMC filter*. For details of ground fault protection contact the supplier of the drive.

A ground fault in the supply has no effect on the drive. If the motor must continue to run with a ground fault in its own circuit then an input isolating transformer must be provided and if an EMC filter is required it must be located in the primary circuit. Unusual hazards can occur on ungrounded supplies with more than one source, for example on ships. Contact the supplier of the drive for more information.

4.5.2 Supplies requiring line reactors

Supply line reactors reduce the risk of damage to the drive resulting from poor phase balance or severe disturbances on the supply network.

Severe disturbances may be caused by the following factors, for example:

- Power factor correction equipment connected close to the drive.
- Large D.C. drives having no, or inadequate line reactors connected to the supply.
- Across the line (DOL) started motor(s) connected to the supply such that when any of these motors are started, the voltage dip exceeds 20 %.

Such disturbances may cause excessive peak currents to flow in the input power circuit of the drive. This may cause nuisance errors, or in extreme cases, failure of the drive.

4.5.3 Line reactor selection

If required, each drive must have its own reactor(s). Three individual reactors or a single three phase reactor should be used.

Reactor current ratings

The current rating of the line reactors should be as follows:

Continuous current rating:

- Not less than the continuous input current rating of the drive

Repetitive peak current rating:

- Not less than twice the continuous input current rating of the drive

For all drive ratings, 2 % line reactors permit drives to be used with a supply unbalance of up to 3.5 % negative phase sequence (equivalent to 5 % voltage imbalance between phases). Higher values may be used if necessary but may result in a loss of drive output (reduced torque at high speed) because of the voltage drop.

Table 4-7 Line reactor rating for 100 V drives

Model Number	Power rating	Power rating	Supply phases	Continuous supply current	Minimum line reactor inductance	Control Techniques part no.
	kW	hp		A	mH	
S100-01113	0.18	0.25	1	7.20	0.79	4401-0143
S100-01123	0.25	0.33	1	8.50	0.79	4401-0143
S100-01133	0.37	0.5	1	10.40	0.79	4401-0143
S100-03113	0.55	0.75	1	14.80	0.48	4401-0144
S100-03123	0.75	1	1	20	0.48	4401-0144
S100-03133	1.1	1.5	1	28.5	0.48	4401-0226

Table 4-8 Line reactor ratings for 200 V drives

Model Number	Power rating	Power rating	Supply phases	Continuous supply current	Minimum line reactor inductance	Control Techniques part no.
	kW	hp		A	mH	
S100-01S13	0.18	0.25	1	3.30	1.96	4401-0224
S100-01213	0.18	0.25	3	2	1.96	4401-0224
S100-02S11	0.18	0.25	1	3.30	1.96	4401-0224
S100-01S23	0.25	0.33	1	3.80	1.96	4401-0224
S100-01223	0.25	0.33	3	2.30	1.96	4401-0224
S100-02S21	0.25	0.33	1	3.80	1.96	4401-0224
S100-01S33	0.37	0.5	1	4.70	1.12	4401-0225
S100-01233	0.37	0.5	3	2.80	1.96	4401-0224
S100-02S31	0.37	0.5	1	4.70	1.12	4401-0225
S100-01S43	0.55	0.75	1	8	0.79	4401-0143
S100-01243	0.55	0.75	3	4.70	1.12	4401-0225
S100-02S41	0.55	0.75	1	8	0.79	4401-0143
S100-01S53	0.75	1	1	9.50	0.79	4401-0143
S100-01253	0.75	1	3	5.70	1.12	4401-0225
S100-02S51	0.75	1	1	9.50	0.79	4401-0143
S100-01D63	1.1	1.5	1/3	15.30	0.48	4401-0144
S100-02S61	1.1	1.5	1	15.30	0.48	4401-0144
S100-01D73	1.5	2	1/3	18.40	0.48	4401-0144
S100-02S71	1.5	2	1	18.40	0.48	4401-0144
S100-03D13	2.2	3	1/3	26.10	0.32	4401-0145

Table 4-9 Line reactor rating for 400 V drives

Model Number	Power rating	Power rating	Supply phases	Continuous supply current	Minimum line reactor inductance	Control Techniques part no.
	kW	hp		A	mH	
S100-02413	0.37	0.5	3	1.90	2.94	4401-0148
S100-02423	0.55	0.75	3	2.50	2.94	4401-0148
S100-02433	0.75	1	3	3	2.94	4401-0148
S100-02443	1.1	1.5	3	4.50	2.94	4401-0148
S100-02453	1.5	2	3	5.60	2.94	4401-0148
S100-02463	2.2	3	3	8.20	1.62	4401-0149
S100-03413	3	3	3	13.20	1.05	4401-0151
S100-03423	4	5	3	16	0.79	4401-0152
S100-04413	5.5	7.5	3	24.68	0.4	4401-0154
S100-04423	7.5	10	3	20.31	0.61	4401-0153
S100-04433	11	15	3	25.97	0.4	4401-0154

If the drive is installed on a system that differs from the values shown, calculate the required inductance using the equation below.

To calculate the inductance required (at Y %), use the following equation:

$$L = \frac{Y}{100} \times \frac{V}{\sqrt{3}} \times \frac{1}{2\pi f I}$$

Where:

L = Inductance (H)

V = Line to Line Voltage (V)

f = Supply Frequency (Hz)

I = Drive Rated Input Current (A)

4.5.4 Main A.C. supply contactor

The recommended A.C. supply contactor type is AC1.

4.5.5 Motor protection

The drive output (U, V, W) has fast-acting electronic short-circuit protection which limits the fault current to a maximum of 2.5 times the rated output current and interrupts the current in approximately 5 µs. No additional short-circuit protection devices are required. The drive provides overload protection for the motor and its cable. For this to be effective, *Motor Rated Current* (**P0.06**) must be set to suit the motor.

WARNING

Motor Rated Current (**P0.06**) must be set correctly to avoid a risk of fire in the event of motor overload.

4.5.6 Motor winding voltage

The output voltage from a variable frequency drive can adversely affect the inter-turn insulation in the motor. This is because of the high rate of change of voltage, in conjunction with the impedance of the motor cable and the distributed nature of the motor winding.

Special precautions are recommended if the A.C. supply voltage exceeds 500 V when a motor cable length exceeding 10 m is used. If these conditions apply it is recommended that an inverter-rated motor be used taking into account the voltage rating of the inverter.

If it is not practical to use an inverter-rated motor, an output choke (inductor) should be used. The recommended type is a simple iron-cored component with a reactance of about 2 %. The exact value is not critical. This operates in conjunction with the capacitance of the motor cable to increase the rise-time of the motor terminal voltage and prevent excessive electrical stress

NOTE

Inverter-rated or inverter duty motors have a reinforced insulation system designed for the fast-rising pulsed output voltage (PWM) generated by variable frequency drives.

4.5.7 ⅄ / Δ motor operation

The voltage rating for ⅄ and Δ connections of the motor should always be checked before attempting to run the motor.

The default setting of the motor rated voltage parameter is the same as the drive rated voltage, i.e.

400 V drive 400 V rated voltage

200 V drive 230 V rated voltage

A typical 3 phase motor would be connected in ⅄ for 400 V operation or Δ for 230 V operation, however, variations on this are common e.g. ⅄ 690 V, Δ 400 V.

Incorrect connection of the windings will lead to a very poor output torque or motor saturation and overheating.

Figure 4-5 Typical ⅄ / Δ connections in a motor

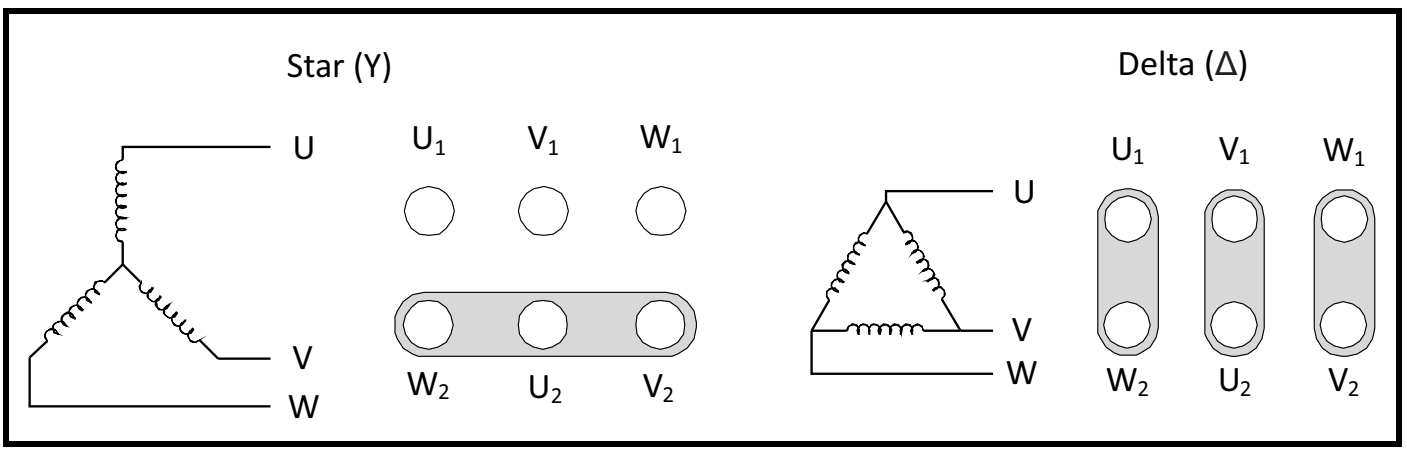

4.5.8 Output contactor

A contactor is sometimes required to be installed between the drive and motor for safety purposes. The recommended motor contactor is the AC3 type.

WARNING

If the cable between the drive and the motor is to be interrupted by a contactor or circuit breaker, ensure that the drive is disabled before the contactor or circuit breaker is opened or closed. Severe arcing may occur if this circuit is interrupted with the motor running at high current and low speed.

Switching of an output contactor should only occur when the output of the drive is disabled. Opening or closing of the contactor with the drive enabled will lead to:

1. *Output Over Current* error (E003)
2. High levels of radio frequency noise emission (disturbance to nearby equipment)
3. Increased contactor wear and tear

4.6 Ground leakage

The ground leakage current depends upon whether the internal EMC filter is connected or not. The drive is supplied with the filter connected. Instructions for disconnecting the internal filter are given in section 4.7.2 *Internal EMC filter* .

Table 4-10 Ground leakage and touch current value

<table>
<tr><th rowspan="2">Rated Voltage
No. of Phases
Supply Type</th><th rowspan="2">Drive Model</th><th colspan="2">Ground Leakage (mA)</th><th colspan="2">Touch Current (mA)</th></tr>
<tr><th>Internal filter connected</th><th>Internal filter disconnected</th><th>Internal filter connected</th><th>Internal filter disconnected</th></tr>
<tr><td>100 V
1-Phase
TN/TT Supply</td><td>S100-011x3</td><td>7.9</td><td rowspan="3">0.1</td><td rowspan="5">>3.5</td><td rowspan="3"><3.5</td></tr>
<tr><td>S100-031x3</td><td>20</td></tr>
<tr><td rowspan="2">100 V
1-Phase
Split-phase Supply</td><td>S100-011x3</td><td>4.5</td></tr>
<tr><td>S100-031x3</td><td>11</td><td>>3.5 (@ >110 V)</td></tr>
<tr><td>200 V
1-Phase
TN/TT Supply</td><td rowspan="2">S100-02Sx1</td><td>3.6</td><td rowspan="2">N/A</td><td rowspan="2">N/A</td></tr>
<tr><td>200 V
1-Phase
Split-phase Supply</td><td>2.0</td><td>>3.5 (@ >190 V)</td></tr>
<tr><td>200 V
1-Phase
TN/TT Supply</td><td>S100-01Sx3
S100-01Dx3</td><td>27</td><td rowspan="2">0.1</td><td rowspan="7">>3.5</td><td rowspan="2">>3.5 (@ >217 V)</td></tr>
<tr><td>200 V
1-Phase
Split-phase Supply</td><td>S100-01Sx3
S100-01Dx3</td><td>5.8</td></tr>
<tr><td rowspan="3">200 V
3-Phase</td><td>S100-012x3
S100-01Dx3</td><td>9.9</td><td rowspan="2">0.2</td><td rowspan="2">>3.5 (@ >250 V)</td></tr>
<tr><td>S100-03Dx3</td><td>9.6</td></tr>
<tr><td>S100-042x3</td><td></td><td></td><td></td></tr>
<tr><td rowspan="3">400 V
3-Phase</td><td>S100-024x3</td><td>18</td><td rowspan="2">0.1</td><td rowspan="2">>3.5</td></tr>
<tr><td>S100-034x3</td><td>15</td></tr>
<tr><td>S100-044x3</td><td>14</td><td>0.1</td><td>>3.5</td><td>>3.5</td></tr>
</table>

NOTE

The above leakage currents do not take into account any leakage currents of the motor or motor cable. Find additional details on the ground leakage in the Commander S100 EMC data-sheet.

WARNING

When the internal filter is installed the leakage current is high. In this case, a permanent fixed ground connection must be provided, or other suitable measures taken to prevent a safety hazard occurring if the connection is lost.

WARNING

When the touch current exceeds 3.5 mA, a permanent fixed ground connection must be provided using two independent conductors each with a cross-section equal to or exceeding that of the supply conductors. The drive is provided with two ground connections to facilitate this. Both ground connections are necessary to meet EN 61800- 5-1: 2007.

4.6.1 Use of a residual current device (RCD)

Only type B RCDs should be used with this product.

If an external EMC filter is used with an ELCB / RCD, a delay of at least 50 ms should be incorporated to ensure spurious trips are not seen. The leakage current is likely to exceed the trip level if all of the phases are not energized simultaneously.

4.7 Electromagnetic compatibility (EMC)

Due to the switching devices used within the drive, the drive may emit radio-frequency noise causing disturbance to electrical devices in close proximity. Emissions are higher with long motor cables and high switching frequencies. Shorter motor cables and low switching frequencies reduce emissions. To ensure reliable operation of the drive and minimise the risk of disturbing nearby equipment, follow the guidance below that is suitable for drive installations that should comply with IEC 61800-3.

NOTE

The installer of the drive is responsible for ensuring compliance with the EMC regulations that apply in the country in which the drive is to be used.

Operation in the first environment

Observe the guidelines given in section 4.7.1 *EMC compliant installation*.. Single phase 230 V drives with an internal C1 filter for operation in the first environment are available. For the other drives in the series, an external EMC filter will always be required to achieve C1.

CAUTION

In a residential environment, this product may cause radio interference in which case supplementary mitigation measures may be required.

Operation in the second environment

In all cases a shielded motor cable must be used. The correct external filter must be fitted at the input to the drive to achieve equipment category C2 compliance for radiated emissions.

CAUTION

The second environment typically includes an industrial low-voltage power supply network which does not supply buildings used for residential purposes. Operating the drive in this environment without an external EMC filter may cause interference to nearby electronic equipment whose sensitivity has not been appreciated. The user must take remedial measures if this situation arises. If the consequences of unexpected disturbances are severe, it is recommended that the guidelines in section 4.7.1 *EMC compliant installation*. be adhered to.

For EMC Performance Ratings and optional external EMC filters, refer to section 10.4 *Emission compliance*..

4.7.1 EMC compliant installation

This section describes installation steps that should be followed to minimise radio-frequency emissions from the drive to reduce disturbance to nearby equipment. As an overview this entails:

- Ensuring good EMC grounding
- Using shielded motor cables
- Providing suitable cable clearances
- Providing surge suppression to analog and digital inputs
- Managing motor cable interruptions
- Following enclosure layout considerations

Ensuring good EMC grounding

Ensure good electrical contact between the drive EMC backplate screw, marked ❶ in Figure 4-6 below, and the enclosure backplate. This may require removing paint on the back panel of the enclosure before installing the drive. The same should be done for the mounting points on an external EMC filter if one is being used.

Where the drive is mounted on DIN rail, a good electrical connection to the backplate is not guaranteed without fitting the additional EMC backplate screw (bottom-centre). If it is not possible to use this screw, then the motor cable screen should be bonded to the cable management bracket accessory, or if necessary connected using a short pig-tail to the drive ground connections.

Figure 4-6 EMC backplate screw

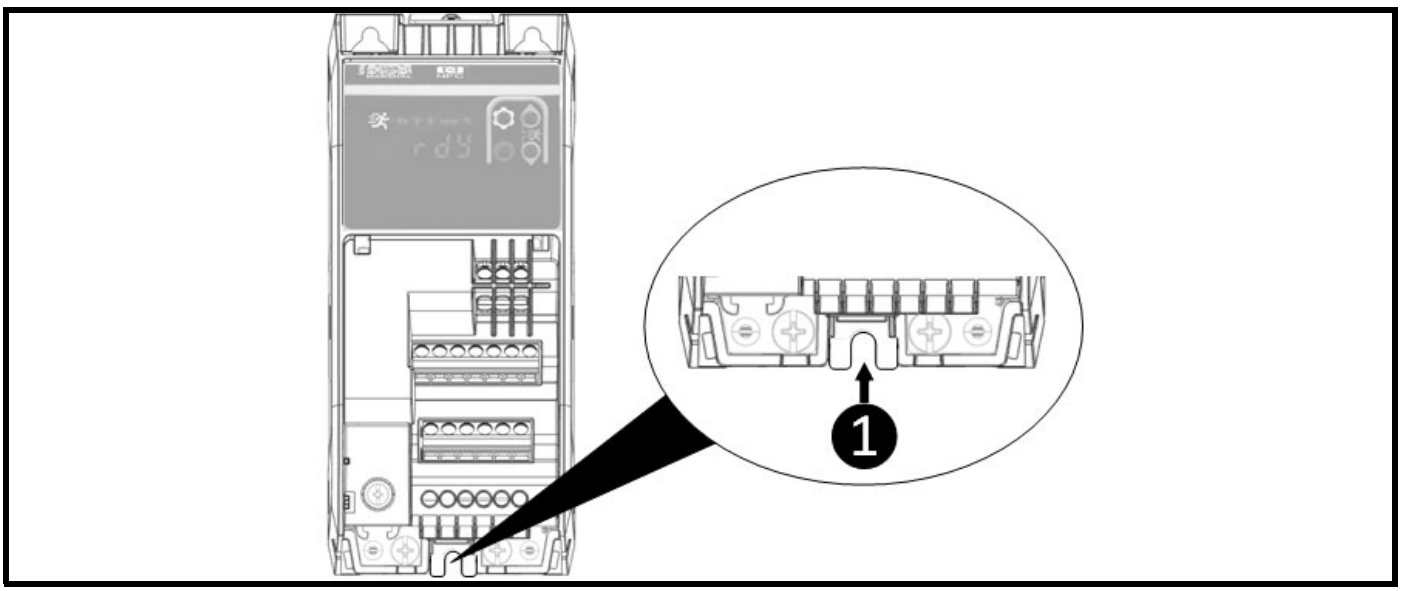

Using shielded motor cables

A shielded cable must be used to connect the drive to motor. Ground the shield of the motor cable as close to the U, V, W terminals as possible. The shield must be connected to the enclosure backplate by a good high-frequency connection, for example by direct clamping using a “U” clamp or similar. Multiple zip-ties embracing and pressing the motor cable screen to the Cable Management Bracket accessory is an acceptable alternative.

The shield of the motor cable must be connected to the ground terminal of the motor frame using a link that is as short as possible, not exceeding 50 mm (2 in) in length. A full 360° termination of the shield to the motor terminal housing (if metal) is beneficial.

Figure 4-7 Installation of the cable management bracket

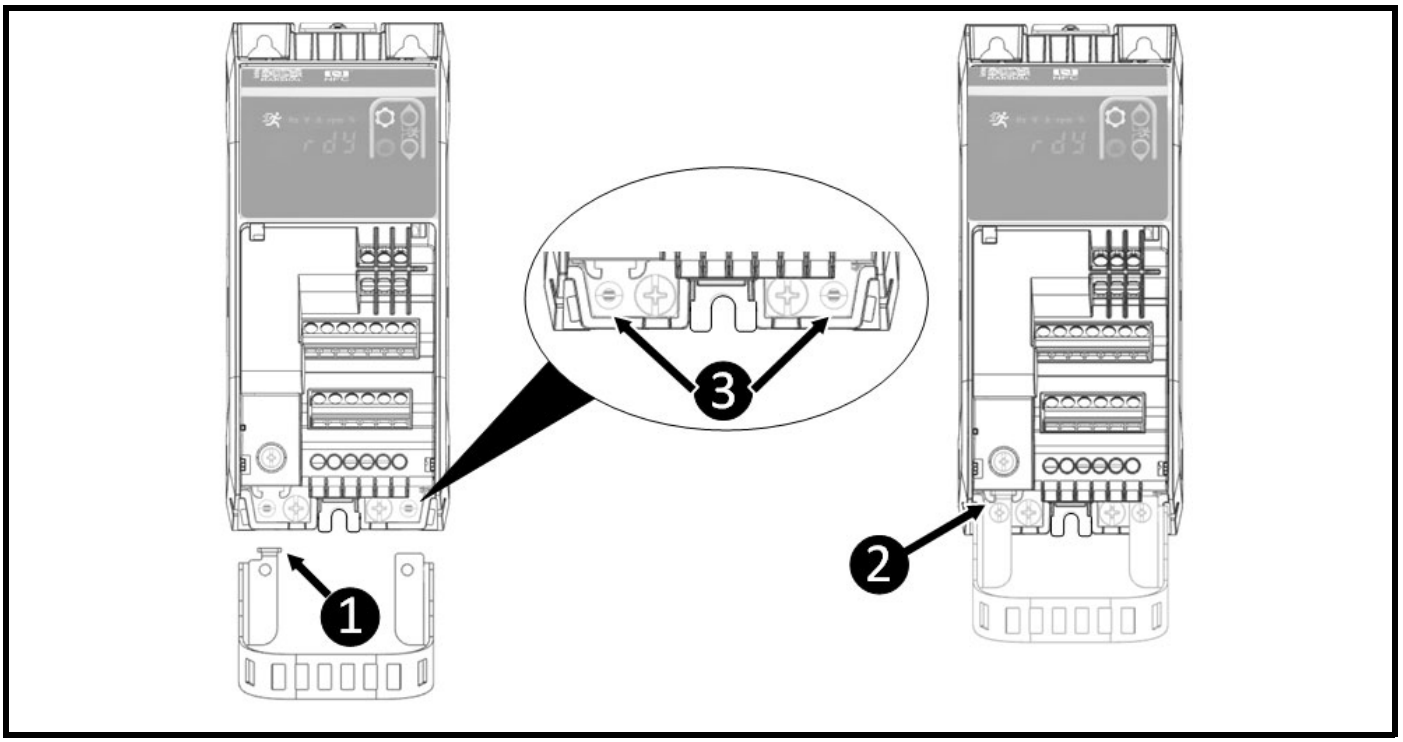

Slide the cable management bracket into position ensuring the guide ❶ falls into the holster ❷. Once in place, secure the bracket with two 6 mm M3 screws (supplied with accessory) into holes ❸ with a phillips or 3 mm (1/8 in) slotted screwdriver. The screws should be tightened with a maximum torque of 1.5 Nm (13.27 lb in).

Figure 4-8 Grounding the motor cable shield

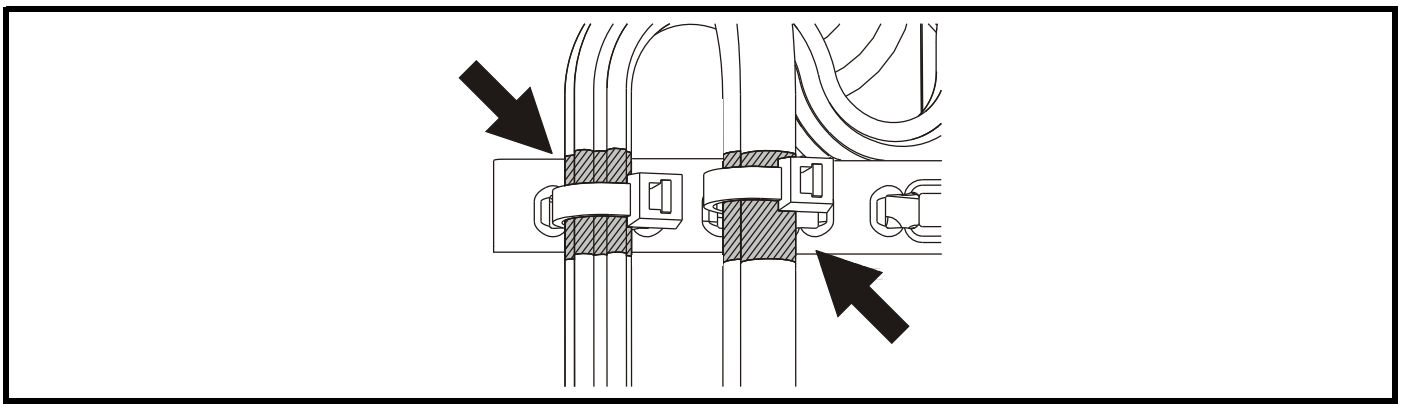

Providing suitable cable clearances

A. Do not place sensitive signal cables, such as I/O or 485 connections, within 300 mm (12 in) of the drive, motor cables, external EMC filter, or the supply cable between the external EMC filter and drive (if applicable) as shown in Figure 4-9.
B. Do not place supply and ground cables within 100 mm (4 in) of the drive or motor cables.

Figure 4-9 Suitable cable clearances

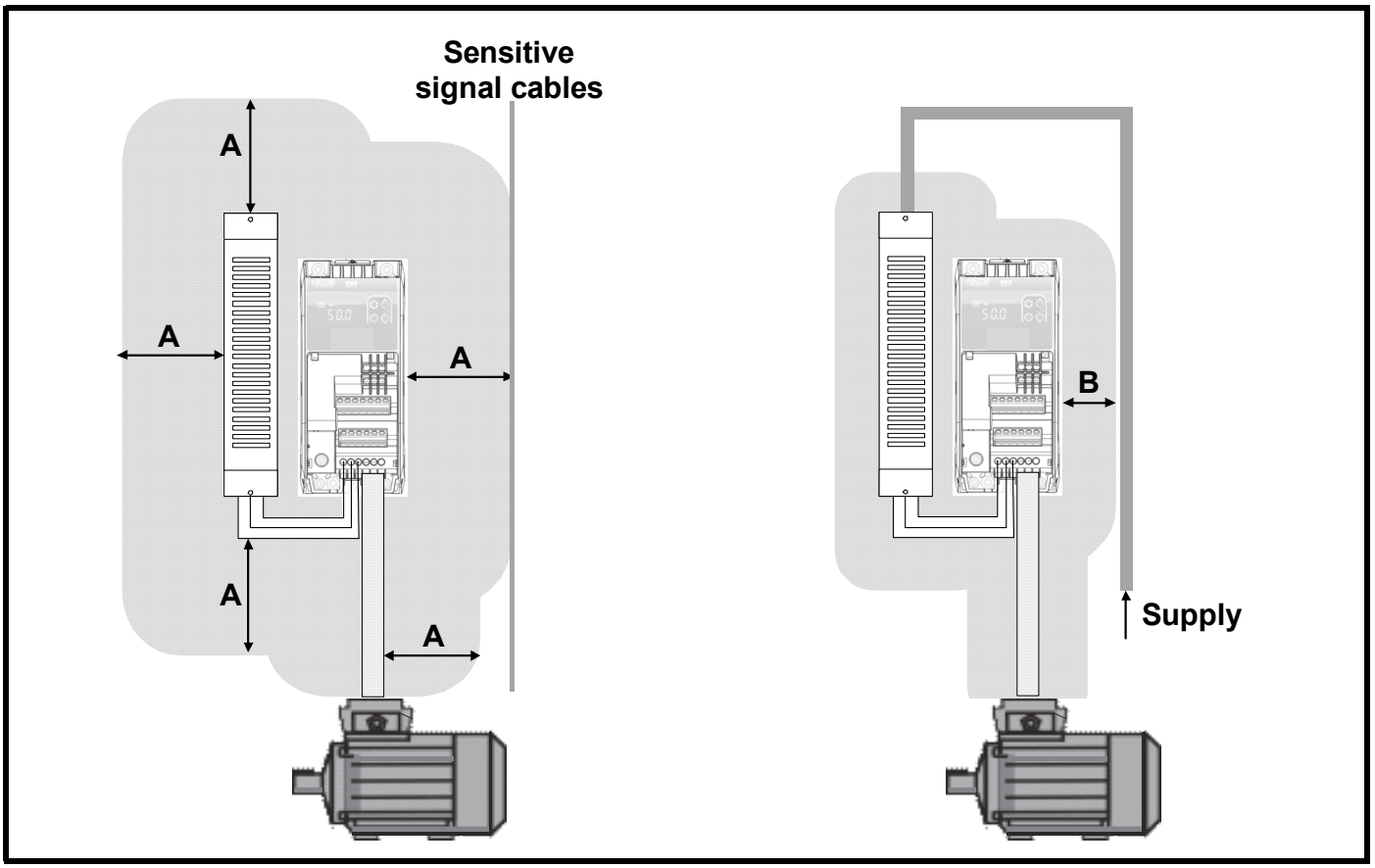

Enclosure layout considerations

- Use a four-core shielded motor cable to connect the motor to the drive. The ground conductor in the motor cable must be connected directly to the earth terminal of the drive and motor.
- If ground connections are made using a separate cable, they should be run parallel to the appropriate power cable to minimise emissions.
- Use a single power ground bus bar or low impedance earth terminal as a common 'clean' ground for all components within the enclosure. Use to connect the incoming supply ground, controller ground, drive supply ground, and the enclosure backplate.
- Any signal cables which are carried inside the motor cable (i.e. motor thermistor, motor brake) will pick up large pulse currents via the cable capacitance. The shield of these signal cables must be connected to ground close to the motor cable, to avoid this noise current spreading through the control system.
- Control wiring that leaves the enclosure must be carried in shielded cable (one or more cables) with the shield clamped to the enclosure back-plate, or alternatively to the optional drive cable management bracket.
- A ferrite clamp-on core should be placed over 24 V power supply connections at the input of an external controller or IPC (Industrial PC). These are also recommended over the I/O and control lines to the drives. These always need to fully embrace pairs of signal/power wires with the corresponding return wires.
- Ideally the cabinet will not be painted on the inside, allowing for a large low-impedance return path for reference potential currents.

Managing interruptions to the motor cable

The motor cable should ideally be a single run of shielded cable having no interruptions. In some installations it may be necessary to interrupt the cable, for example to connect the motor cable to a terminal block within the drive enclosure, or to fit an isolator switch to allow safe working on the motor. In these cases adhere to the following guidelines:

Terminal block in the enclosure

The motor cable shields should be bonded to the back-plate using uninsulated metal cable-clamps which should be positioned as close as possible to the terminal block. Keep the length of power conductors to a minimum and ensure that all sensitive equipment and circuits are at least 0.3 m (12 in) away from the terminal block.

Figure 4-10 Connecting the motor cable to a terminal block in the enclosure

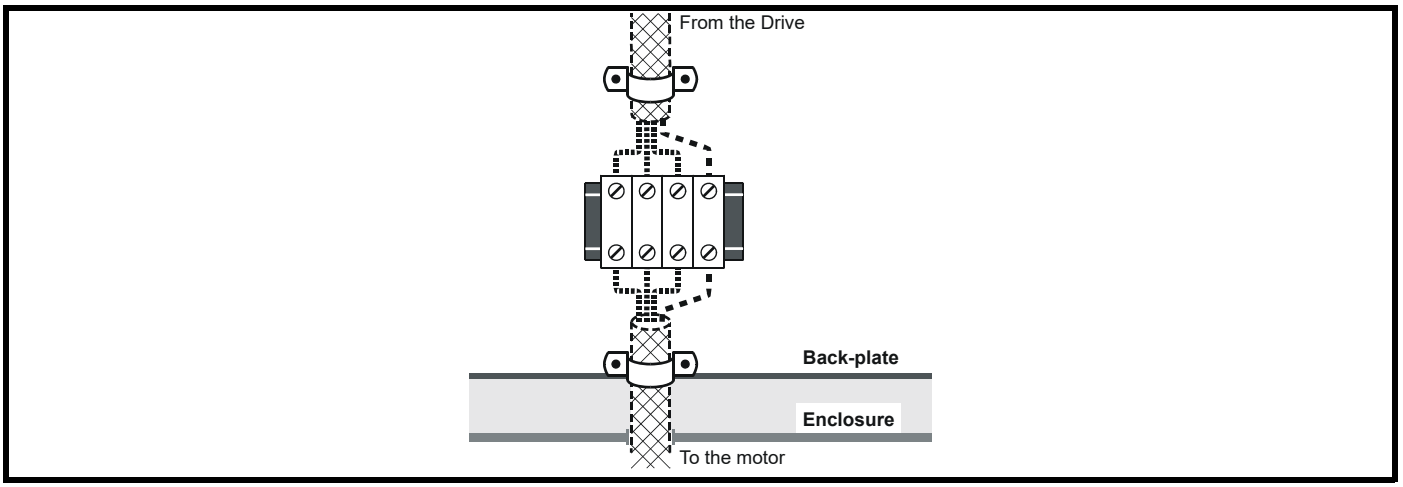

Using a motor isolator / disconnect-switch

The motor cable shields should be connected by a very short conductor having a low inductance. The use of a flat metal coupling-bar is recommended; conventional wire is not suitable. The shields should be bonded directly to the coupling-bar using uninsulated metal cable-clamps. Keep the length of the exposed power conductors to a minimum and ensure that all sensitive equipment and circuits are at least 300 mm (12 in) away.

The coupling-bar may be grounded to a known low-impedance ground nearby, for example a large metallic structure which is connected closely to the drive ground.

Figure 4-11 Connecting the motor cable to an isolator / disconnect switch

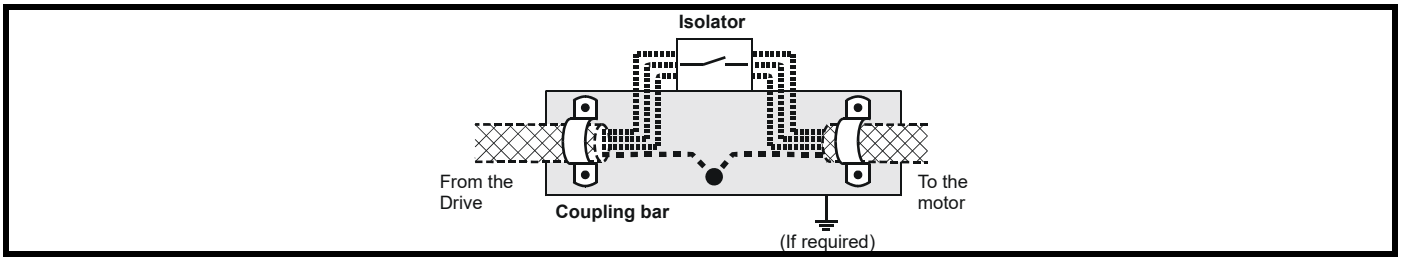

Providing surge immunity for control circuits

In applications where the control circuits may be exposed to high-energy voltage surges, some special measures may be required to prevent malfunction or damage. Surges may be caused by lightning or severe power faults in association with grounding arrangements which permit high transient voltages between nominally grounded points. This is a particular risk where the circuits extend outside the protection of a building.

As a general rule, if the circuits are to pass outside the building where the drive is located, or if cable runs within a building exceed 30 m, some additional precautions are advisable. One of the following techniques should be used:

1. Shielded cable with additional power ground bonding. The cable shield may be connected to ground at both ends, but in addition the ground conductors at both ends of the cable must be bonded together by a power ground cable (equipotential bonding cable) with cross-sectional area of at least 10 mm^2, or 10 times the area of the signal cable shield, or to suit the electrical safety requirements of the plant. This ensures that fault or surge current passes mainly through the ground cable and not in the signal cable shield. If the building or plant has a well-designed common bonded network this precaution is not necessary.
2. Additional over-voltage suppression - for the analog and digital inputs and outputs, a zener diode network or a commercially available surge suppressor may be connected in parallel with the input circuit as shown in Figure 4-12. If a digital port experiences a severe surge its protective alarm may operate A.7 (I/O Overload).

Figure 4-12 Surge suppression for digital and unipolar inputs and outputs

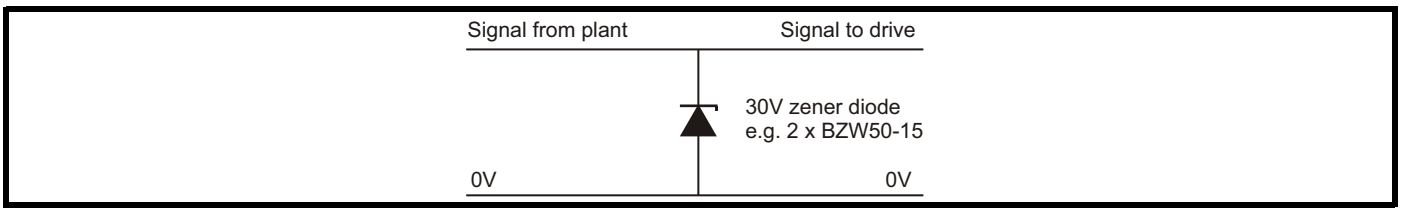

4.7.2 Internal EMC filter

The Commander S100 is available with C1 and C3 internal filters. It is recommended that the internal EMC filter be kept in place unless there is a specific reason for disconnecting it. The internal EMC filter reduces radio-frequency emission into the line power supply. The filter may need to be removed if the ground leakage current is unacceptable. As shown in Figure 4-13, the internal EMC filter is disconnected by removing the screw ❶. The filter cannot be disconnected in a 200 V drive with a C1 internal filter.

Should the screw need replacing, the screw supplied with the drive is a zinc plated 12 mm M3 Phillips/Slotted screw.

WARNING

The supply must be disconnected for 5 minutes before disconnecting the internal EMC filter.

Figure 4-13 Disconnecting the internal EMC filter

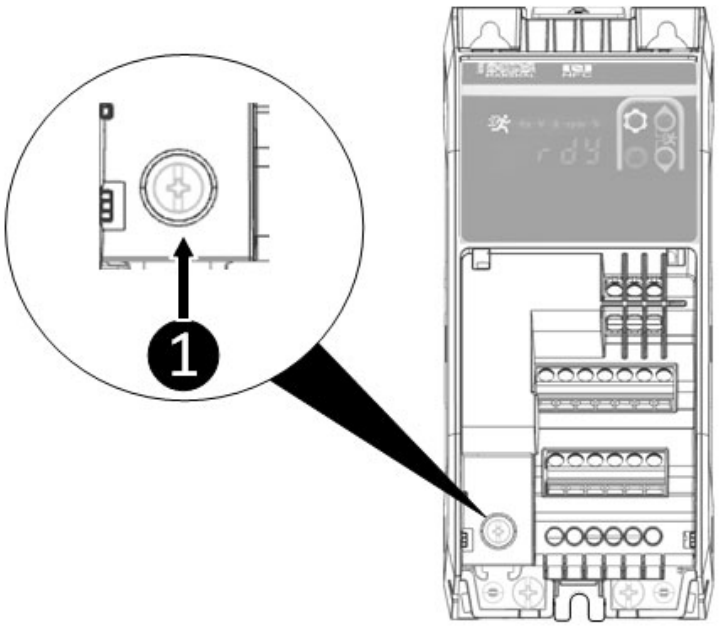

4.8 Control connections

CAUTION

If any of the digital inputs are connected in parallel with an inductive load (i.e. contactor or motor brake) then suitable suppression (i.e. diode or varistor) should be used on the coil of the load. If no suppression is used then over voltage spikes can cause damage to the digital inputs and outputs on the drive

4.8.1 Control terminal connections

The functions of the control terminals can be set using parameters or via Marshal. The default connections are suitable for basic motor speed control using analog inputs to define a frequency reference.

For wiring diagrams of the non-default configurations, refer to **section 6.2 *Controlling the motor speed***. or find the diagrams embedded within Marshal.

Figure 4-14 Default control terminal connections

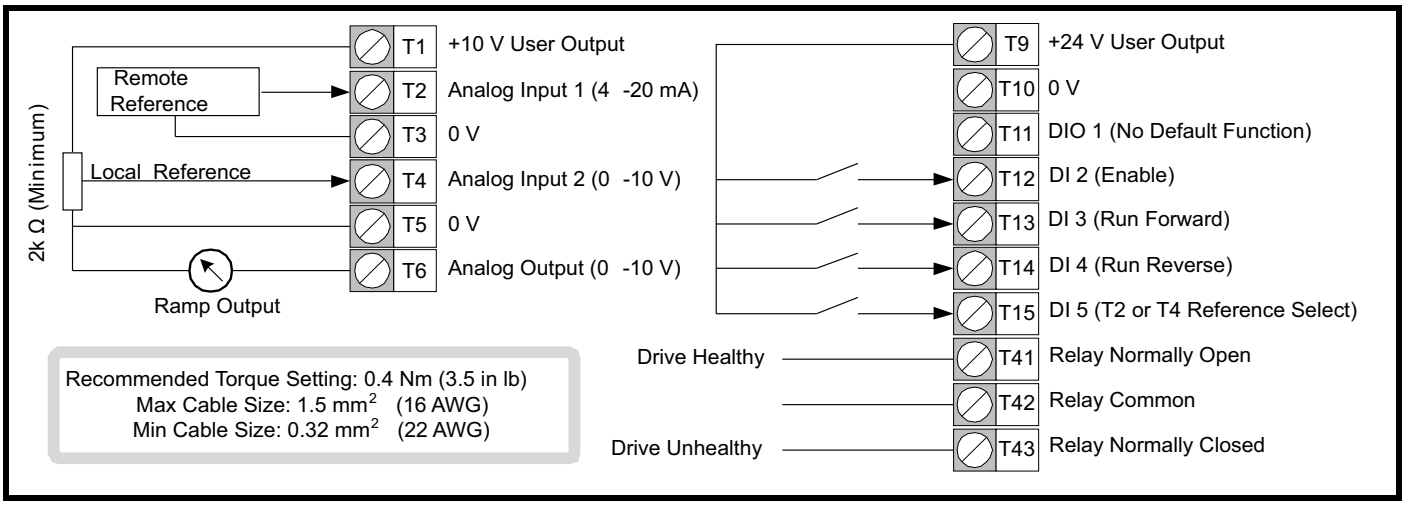

The 0 V terminals are internally connected ground/earth and cannot be disconnected. An external controller ground or reference should be connected directly to the drive 0 V reference terminals (T3, T5, T10). If more 0 V connections are required, a local terminal block placed next to the drive and close to the I/O port should be used. External modules that interact with the I/O of the drive should avoid connecting their references to the cabinet or the ground bar, direct connections should be used instead.

The voltage rating of the relay cables should be suitable for the maximum expected voltage.

WARNING

The control connections shown above and the 485 port can be PELV rated when connected within a PELV circuit. The terminals are not PELV rated if the relay is connected to a circuit exceeding Overvoltage Category II.

4.8.2 Control terminal specification

This section provides the electrical specification of each control terminal. The type and function of each terminal is configurable using the parameters in menu 6. See section 7.3.6 *Menu 6 - IO configuration*..

T1	**+10 V User Output**
Supply for external analog devices	
Nominal voltage	10.2 V
Voltage tolerance	±3 %
Maximum Output Current	5 mA
Overload	20 mA Maximum

T2	**Analog Input 1**
T4	**Analog Input 2**
Unipolar single-ended analog voltage or unipolar current input	
Default function of analog input 1	Remote 4-20 mA Frequency Reference
Default function of analog input 2	Local 0-10 V Frequency Reference
Type Select Parameter	*T2 Analog Input 1 Type (***P6.01**) *T4 Analog Input 2 Type* (**P6.02**)
As a Voltage Input	
Full scale voltage range	0 V to +10 V ±3 %
Maximum offset	±30 mV
Input resistance	100 kΩ
As a Current Input	
Current ranges	0 to 20 mA ±5 %, 4 to 20 mA ±5 %,
Maximum offset	250 µA
Equivalent input resistance	~150 Ω @ 20 mA
As a Digital Input	
Digital Function Select Parameter	*T2 Analog Input 1 Digital Function Select* (**P6.14**) *T4 Analog Input 2 Digital Function Select* (**P6.15**)
Lower Threshold	< 7 V
Upper Threshold	8 V
Impedance	No built in load resistance. Users must fit an external pull up or pull down resistor or drive with a push pull digital output.
Common to all types	
Resolution	11 bits
Sample rate	4 ms
Absolute maximum voltage	-18 V to +30 V relative to 0V
Absolute maximum current	25 mA

T3, T5, T10	**0 V Common**
Common connection for all external devices	

T6	**Analog Output**
Unipolar single-ended analog voltage or unipolar current output	
Default function	Ramp Output
Function Select Parameter	*T6 Analog Output Function Select* (**P6.06**)
Default type	0 to 10 V
Type Select Parameter	*T6 Analog Output Type (***P6.03**)
Voltage Range	0 to 10 V
As a Voltage Output	
Voltage Range	0 to +10 V ±5 %
Maximum offset	15 mV
Load resistance	≥ 2 kΩ
Protection	Short circuit relative to 0 V
As a Current Output	
Current Range	0 to 20 mA ±5 %, 4 to 20 mA ±5 %
Maximum Load Resistance	500 kΩ
Common to all output types	
Resolution	10 bit
Sample rate	10 ms

T9	**+24 V User Output**
Supply for external analog devices	
Voltage tolerance	+20 %, -11 %
Maximum output current	100 mA (Shared with T11 Digital Output and 485 port)

T11	**Digital Input/Output 1**
Multi-functional digital input or output	
Default Function	None
Function Select Parameters	*T11 Digital Input 1 Function (***P6.16**) *T11 Digital Output Function Select* (**P6.09**)
Default type	Digital Input (Positive Logic)
Type Select Parameter	*T11 Digital IO 1 Type (***P6.04**)
As a digital input (default)	
Lower Threshold	< 9 V
Upper Threshold	> 10 V
Absolute maximum applied voltage range	-8 V to +30 V relative to 0V
Impedance	6.8 kΩ
As a digital output	
Maximum Source Current	50 mA (100 mA total limit on T9, T11 and 485 port)
As a Frequency or PWM Output	
Maximum Output	10 kHz
PWM Output	1 kHz
Resolution	0.02 %
Common to all output types	
Voltage Range	0 V to +24 V
Sample rate	4 ms

T12	**Digital Input 2**
T13	**Digital Input 3**
T14	**Digital Input 4**
Programmable Digital Inputs	
T12 Default Function	Enable
T13 Default Function	Run Forward
T14 Default Function	Run Reverse
Function Select Parameters	*T12 Digital Input 2 Function* (**P6.17**) *T13 Digital Input 3 Function* (**P6.18**) *T14 Digital Input 4 Function* (**P6.19**)
Default Logic	Positive Logic
Lower Threshold	< 9 V
Upper Threshold	> 10 V
Absolute maximum applied voltage range	-8 V to +30 V relative to 0V
Impedance	6.8 kΩ
Voltage Range	0 V to +24 V
Sample rate	4 ms

T15	**Digital Input 5**
Programmable Digital Input or Frequency Input	
T15 Default Function	Ref Switch Bit 0
Function Select Parameter	*T15 Digital Input 5 Function* (**P6.20**)
Default Logic	Positive Logic
Lower Threshold	< 9 V
Upper Threshold	> 10 V
Absolute maximum applied voltage range	-8 V to +30 V relative to 0V
Impedance	6.8 kΩ
Voltage Range	0 V to +24 V
Sample rate	4 ms
As a Frequency Input	
Maximum Frequency	100 kHz
Low Level	< 5 V
High Level	> 15 V

T41	**Relay Normally Open**
T42	**Relay Common**
T43	**Relay Normally Closed**
Programmable Relay	
Relay Default Function	Drive Healthy
Function Select Parameter	*T41-T43 Relay Function Select* (**P6.08**)
Contact Voltage Rating	240 Vac, installation over-voltage category II
Contact Maximum Current Rating	2 A A.C. 240 V 4 A D.C. 30 V resistive load 0.5 A D.C. 30 V inductive load (L/R = 40 ms)
Minimum Recommended Voltage Rating and Current	12 V 100 mA
Update Rate	10 ms

4.9 Communication connections

The drive includes a EIA-485 communications port, marked ❶ in Figure 4-15. This allows connection between the drive and: a PC for commissioning; a controller for drive control; a remote keypad for a drive display outside of an enclosure; or an HMI for an advanced display and system control.

The default baud-rate of the port is 115200 bps to provide compatibility with Control Techniques remote keypads, but this may need to be reduced when connecting to a PC for commissioning or diagnostics. The baud rate can be reduced by setting *Serial Baud Rate* (**P4.05**) to *19200* (5). Alternatively, the latency timer should be reduced to 1 ms in the PC's COM port advanced properties which can be accessed through the device manager.

NOTE

Changing the latency timer setting may affect other communication software on the user's PC and advice should be sought from the device administrator before making this change.

Figure 4-15 Location of the 485 serial communications port

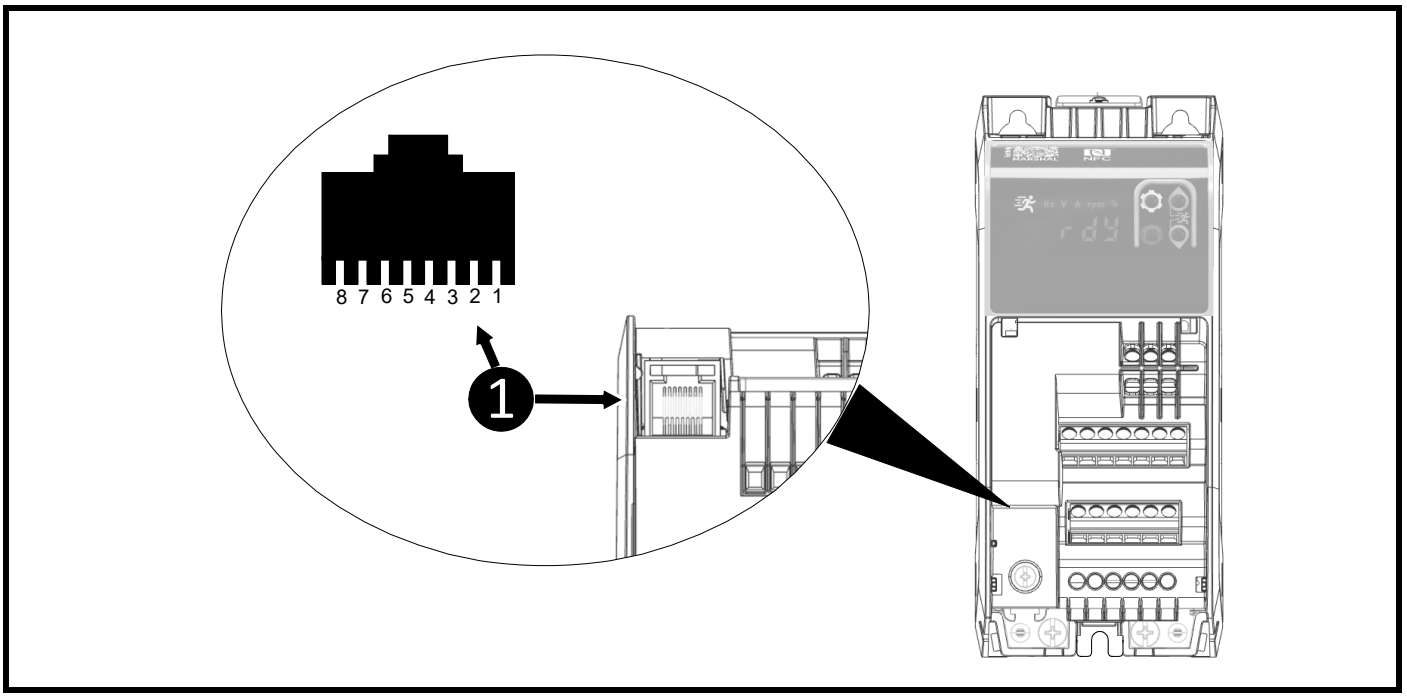

4.9.1 RJ45 connections

The drive supports MODBUS RTU protocol. See Table 4-11 for connection details.

Table 4-11 Serial communication port pin-outs (RJ45)

Pin	Function
1	Not Connected
2	RX TX
3	0 V
4	+24 V (Total output current 100 mA)
5	Not connected
6	TX enable (high when transmitting)
7	RX\ TX\
8	RX\ TX\
Shield	Not Connected

Minimum number of connections are 2, 3 and 7.

4.9.2 Port polarization (biasing)

The Commander S EIA-485 serial communications port requires polarization (biasing) of the data lines when used in a multipoint system.
Port polarization (biasing) is not required when using the CT Comms cable point to point (between a PC and the drive).

The Modbus standard specifies that to prevent spurious triggering when there is no data being transmitted, the data lines are polarized (biased) with pull-apart resistors, one resistor from the RJ45 pin 2 connection (RX TX) to +5 V and the other resistor from the RJ45 pin 7 connection (/RX /TX) to 0 V. These resistors should be in the range 450 to 650 Ohms and fitted in or as close as possible to the master controller.

NOTE

Pin 4 (+24 V) is used to power the CT Comms cable and should not be used for biasing or termination.

4.9.3 Network termination

To minimise the transmission-line effects, a line termination resistor should be connected across each pair of data wires per segment; in a 4-wire system, this implies two resistors are required and in a 2-wire system, a single resistor is required. The termination resistor should have a value equal to the characteristic impedance of the cable (Zo), commonly this value is between 100 and 120 Ohms.

4.9.4 Communication cable selection

The recommended cable type for optimum performance is a 2 or 4 wire twisted pair with an overall braided shield and a characteristic impedance of about 120 Ohms.

CAUTION

Standard Ethernet cables should not be used when connecting drives on a EIA-485 network as they do not have the correct twisted pairs for the pinout of the serial comms port.

WARNING

Use of shielded cable is recommended. The shield should be connected to ground at one point. This provides high noise immunity against external interference sources such as motor drives and A.C. power cables.

4.9.5 Special considerations for a 2-wire network

When communicating over a 2-wire network, only one node can be transmitting on that network at any one time, in order to comply with this condition the transmitters of each node that is not transmitting must be inactive and in the high-impedance state.

Generally there are 3 methods of transmitter control:

- Software control.
  The application software controls the transmitters of the host computer.
- Automatic hardware control.
  The EIA-232 to EIA-485 adapter automatically detects the end of the message frame and disables the transmitters. (This is the method used when using the CT Communications cables)
- Manual hardware control.
  The EIA-232 to EIA-485 adapter uses the 'TX Enable' output from the drive to enable or disable the transmitters.

5 Getting started

This chapter covers the user interfaces, menu structure and security levels of the drive. There are three main ways to interface with the Commander S100: by mobile app with Marshal, by PC with Connect, or by using the keypad.

5.1 Marshal mobile app

The fastest and easiest way to get the drive up and running is to use Marshal, a mobile app that takes the user through a simple step by step commissioning process as well as providing access to detailed parameter descriptions and advanced drive diagnostics. Marshal is available for download from the Google Play store or the App Store for Apple devices. Use the QR code below for a quick link.

MARSHAL

Download on the App Store

GET IT ON Google Play

Marshal uses NFC technology to read and write data to and from the drive, so it is important that the mobile device used has this technology. To check the device has NFC, open the "Settings app" and search for "NFC" or "Near Field Communication". NFC may need to be enabled on the device before use.

5.1.1 Connecting with Marshal

To configure parameter settings with Marshal, the user must create or open a project. This can be done from the home screen by using the options shown in Figure 5-1 below.

When Marshal prompts the user to scan the drive, the NFC antenna on the device must be held within 10 mm of the NFC logo above the drive keypad. The NFC antenna is located in different locations depending on the device design and should be held against the top of the drive and moved in a figure of 8 motion until the connection is successful.

Figure 5-1 Marshal homepage

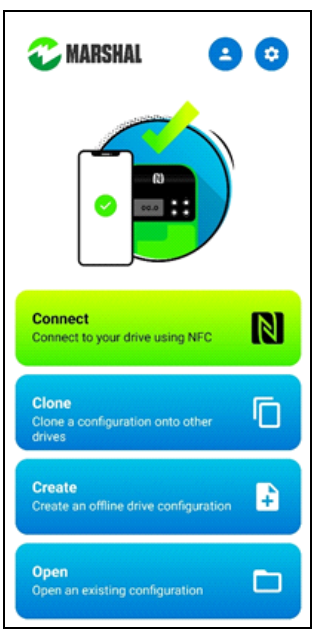

5.1.2 Using Marshal

Once the user has connected to a drive or opened a configuration, Marshal will display the drive dashboard. The dashboard holds the tools required to commission the drive and provides diagnostic information.

Figure 5-2 Marshal dashboard

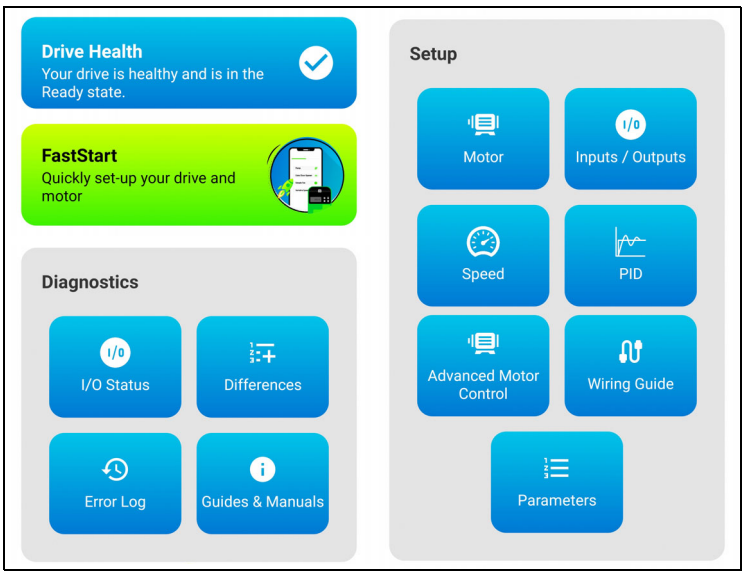

FastStart is the primary setup wizard, but more advanced commissioning can be done through the individual tools such as *PID* or *Advanced Motor Control*.

NFC is not a live connection, so changes made to any drive parameters in Marshal need to be written to the drive in order to take effect. The FastStart commission wizard will prompt the user when this is appropriate, but this can also be done at any time by selecting "Write to Drive" in the dashboard menu.

Table 5-1 Marshal functions

Icon	Functions
	Write to Drive
	Save
	Save As
	Drive Properties

5.1.3 Saving parameters in Marshal

When parameter settings are changed in Marshal, the new parameter set needs to be written to the drive and the drive will save these parameter changes automatically.

To save a configuration for later, click "Save" or "Save As" in the dashboard menu.

5.1.4 Marshal security

To prevent unauthorized parameter changes, a PIN can be set in *Security PIN* (**P4.02**). This can be changed in Marshal via the drive properties tab that can be accessed by clicking the lock icon at the top of the dashboard or the drive properties symbol in the dashboard menu. Once set, the PIN must be entered before any parameter is accessed on the keypad or before attempting to read or write drive settings in Marshal. In Marshal, the PIN only has to be entered once unless the user closes the project or if the password is changed.

Communications via NFC can be limited or disabled entirely according to the value set in *Near Field Communication* (**P4.20**). If set to 0, NFC communications are blocked. If set to 1, drive parameters can only be read. The default setting of 2 enables full read/write access with NFC when the drive is both unpowered and powered.

5.2 Connect

Connect is a PC tool available from www.controltechniques.com/support. The software allows the user to create a project consisting of multiple drives from different product ranges, commission and tune the drives using a CT USB Comms cable (CT Part No. 4500-0096) to connect the PC to the drives 485 port.

When using a PC to communicate with the drive at the default baud rate of 115200 bps, the Latency Timer for the PC comms port should be set to 1 ms using the device manager on the PC. See section 4.9 *Communication connections*.

5.3 Understanding the display

The Commander S100 display is used to show drive status, parameter numbers, parameter values and to indicate units of the currently displayed parameter or to indicate that the drive is running. See Figure 5-3 for more information.

Figure 5-3 Display

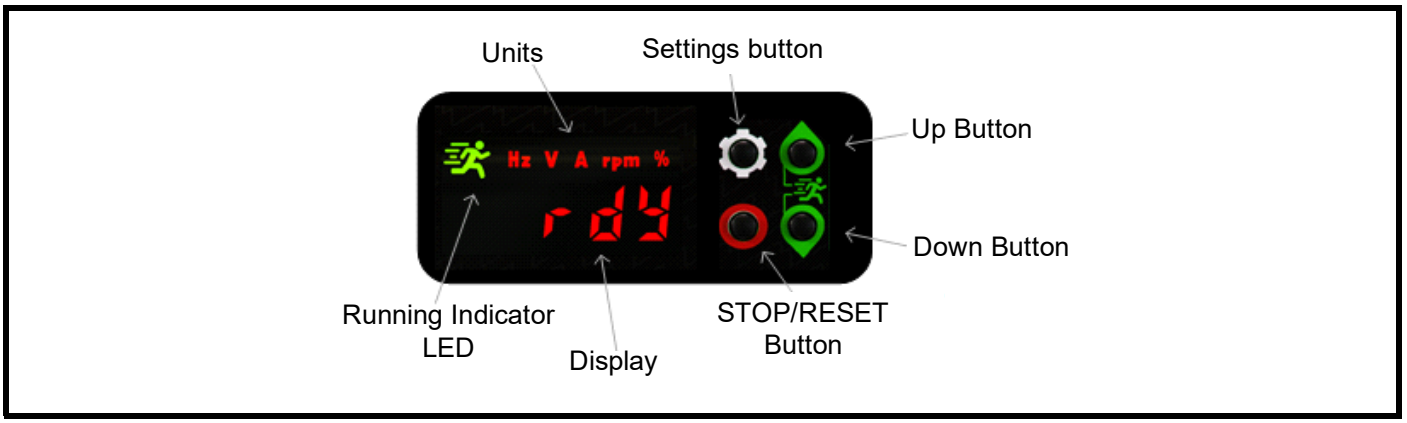

Table 5-2 Status indicators

Drive Display	Text	Detail
S100	S100	The drive is initialising
inh	Inhibit	The drive is not enabled
rdy	Ready	The drive is enabled but has no active run signal
	Running	The drive is enabled and has an active run signal
dcEL	Decelerating to stop	The drive is decelerating to a stop
UU	Under Voltage	The drive is in the under-voltage state
SUPL	Supply Loss	Supply loss has been detected
InJE	Injecting D.C.	The drive is injecting D.C. current into the motor
E001	Error	The drive is in an error state, check the error code shown on the display in section 9.2 *Errors* for the cause and solutions
A.0	Alarm	The drive is in an alarm state, check the code shown on the display in section 9.1 *Alarms* for the cause
HF.01	Hard Fault	Hardware Fault - Contact the supplier of the drive
P0.01	Parameter	Parameter location PY.XX, where Y = menu and XX = parameter

Drive Display	Text	Detail
- - - -	PIN Entry	Enter the security PIN to view or edit the selected parameter
Bit 7 6 5 4 3 2 1 0	Binary value display	A binary parameter (Bit 3 is shown as active in example)

5.4 Using the keypad

The Commander S100 has four keys as can be seen in Table 5-3 below.

Table 5-3 Key functions

	Setting button - Used to navigate through the drive parameter settings and rotate displayed parameters when the drive is running.
	STOP / RESET button - Used to reset the drive if there is an error or to stop the drive running if the Run / Stop configuration is set appropriately.
	UP & DOWN buttons - Individually used to increase or decrease editable values shown on the drive display. Holding down a button will scroll between menus or move the cursor if editing a parameter.
	UP & DOWN buttons - If pressed together, they provide the drive with a run signal if the Run / Stop configuration is set appropriately.

Figure 5-4 Menu structure

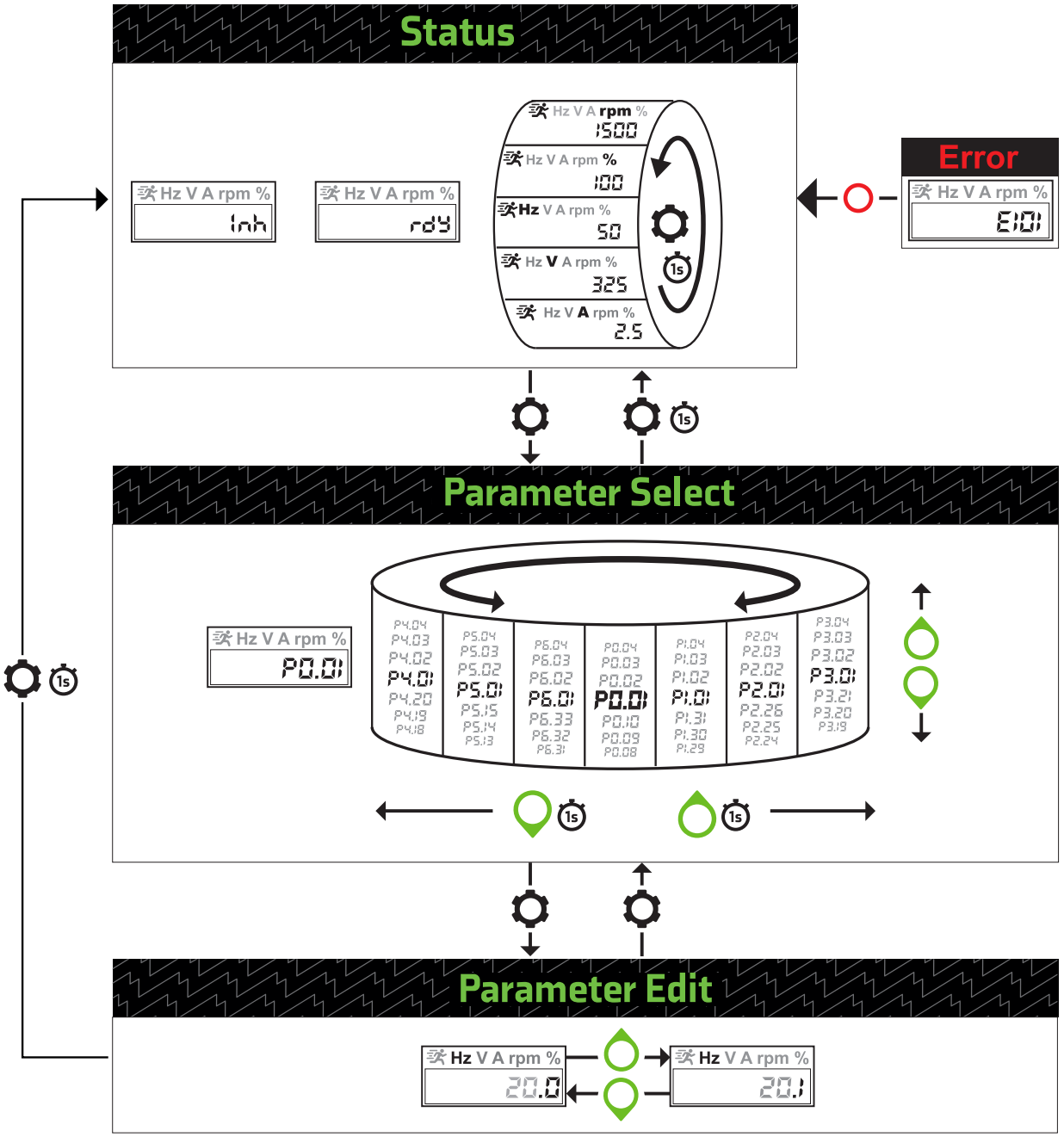

Indicates the key should be pressed and held to enact the desired movement. This time varies for different operations to allow for the best usability but 1 second is the standard time for most operations.

5.5 Understanding the menu structure

The drive parameters, status, and monitoring values can be found within three modes: Status, Parameter Select and Parameter Edit.

Status

The primary mode of the drive that is used to provide users with an indicator to show the current status of the system, see Table 5-2. If the keypad is to be used to provide a drive frequency reference, the display must be in *Status* for the user to be able to edit the reference using the UP and DOWN buttons. If the drive is running, *Status* will show one of five monitoring parameters and the user can rotate between these by holding the *Settings* button. The monitoring parameters that can be shown are as follows:

Ramp Output (Hz)
Output Voltage (V)
Output Current (A)
Output Speed (rpm)
Drive Load (%)

Parameter select

From *Status* users can move to *Parameter Select* by pressing the *Settings* button. *Parameter Select* allows the user to navigate through the drive parameters. Users can scroll up and down the list of individual parameters by pressing the *UP* and *DOWN* buttons or they can switch between different menus by holding the *UP* button to move to the next menu or the *DOWN* button to move to the previous menu.

Parameter edit

Once the desired parameter has been located in *Parameter Select*, the parameter value can be viewed or edited by pressing the *Settings* button. The units of the selected parameter will be shown on the display. To edit the value of the parameter, the *UP* or *DOWN* buttons should be pressed to increase or decrease the value as appropriate. Holding the *UP* or *DOWN* buttons will move the cursor left or right respectively. The digit currently being edited will flash. *Status & Monitoring* parameters in Menu 1 are read only and cannot be edited.

Once the change has been made, exit to *Parameter Select* by pressing the *Settings* button or exit to *Status* by holding the *Settings* button. All parameters changes are saved immediately after exiting *Parameter Edit*.

5.6 Saving parameters

Parameter changes are saved automatically after editing by pressing or holding the *Settings* button to return to *Parameter Select* or *Status* respectively. To save parameter changes over communications, *Save Parameters* (**P4.19**) should be set to 1. After saving the parameter will reset to 0.

5.7 Restoring parameter defaults

Restoring parameter defaults by this method saves the default values in the drive memory.

Procedure via Keypad

1. Ensure the drive is not running. (Display shows: inh or rdy)
2. Set *Restore Factory Defaults* (**P4.01**) to 1 to load 50 Hz defaults; or 2 to load 60 Hz defaults.
3. Press or hold the settings button to exit the parameter and default the drive parameters.

Procedure via Marshal

1. Ensure the drive is not running.
2. Open Marshal and Connect to the drive to enter the Drive Dashboard.
3. Open the *Project Menu* tool bar and select default drive .
4. Follow on-screen instructions.

Procedure via Communications

1. Ensure the drive is not running.
2. Set *Restore Factory Defaults* (**P4.01**) to 1 to load 50 Hz defaults; or 2 to load 60 Hz defaults.

5.8 Drive security

Set *Security PIN* (**P4.02**) to a value between 1 and 9999 to prevent unauthorized parameter changes to occur.

If *Security PIN* (**P4.02**) is set to a value other than 0, when trying to access a writable parameter chosen in *Parameter Select*, '- - - -' will be displayed, as shown in Table 5-2. The PIN set in *Security PIN* (**P4.02**) will then have to entered one digit at a time, pressing the settings button to confirm each digit before the parameter value can be edited or viewed.

6 Running the motor

6.1 Basic setup

It is recommended to use the FastStart option within Marshal to commission the drive. Alternatively, the keypad can be used to edit drive parameters directly using the keypad instructions in section 5 *Getting started*.

Configure	
Action	**Detail**
Power	Power the drive, ensure the drive is not enabled. (Display shows: inh)
Enter	1. Minimum Frequency Limit P0.01 (Hz) 2. Maximum Frequency Limit P0.02 (Hz) Typically the maximum frequency limit is the motor rated frequency. 3. Acceleration Rate 1 P0.03 (s) 4. Deceleration Rate 1 P0.04 (s) These parameters define ramp times between 0 Hz and *Maximum Frequency Limit* P0.02.
Select	5. Frequency Reference Configuration P0.05 This parameter configures the drive speed control. See details within Marshal or section 6.2 *Controlling the motor speed*.
Enter Motor Nameplate Details	6. Motor Rated Current P0.06 (A) 7. Motor Rated Speed P0.07 (rpm) 8. Motor Rated Voltage P0.08 (V) 9. Motor Rated Power Factor P0.09 (cosΦ) 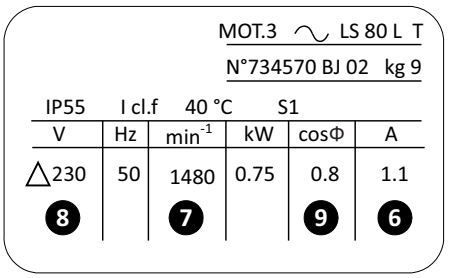
Select	10. Run/Stop Configuration P0.10 This parameter configures how to run the drive. See details within Marshal or section 6.3 *Running, stopping and controlling motor direction*.
Running and Speed Control (Default Configuration Settings)	
Run	**Always ensure it is safe to start the motor before doing so.** Provide an Enable signal to terminal 12 (T12). Provide a run signal to T13 (Run Forward) or T14 (Run Reverse).
Increasing and Decreasing Motor Speed	Increase or decrease current to analog input 1 (T2) to increase or decrease the frequency reference. Close digital input 5 (T15) to switch to a voltage reference from analog input 2 (T4).
Stopping	Remove the Run Forward (T13) or Run Reverse (T14) signal to stop the motor by following the selected deceleration rate. If the Enable signal (T12) is removed while the motor is running, the drive output is immediately disabled, and the motor will coast to a stop.

6.2 Controlling the motor speed

In the Commander S100, up to eight references can be configured at one time and the user can switch between these references using digital inputs or by selecting a specific reference in *Frequency Reference 1 to 8 Switch* (**P2.20**). The references are configured in the parameters *Frequency Reference 1 Selector* (**P2.21**) to *Frequency Reference 4 Selector* (**P2.24**) with the reference inputs shown in Table 6-1.

Table 6-1 Frequency references

Value	Frequency Reference	Description
0	None	The frequency reference is fixed at the *Minimum Frequency Limit* (**P2.01**)
1	Preset 1	The frequency reference is defined by *Preset Frequency 1* (**P2.16**)
2	Preset 2	The frequency reference is defined by *Preset Frequency 2* (**P2.17**)
3	Preset 3	The frequency reference is defined by *Preset Frequency 3* (**P2.18)**
4	Preset 4	The frequency reference is defined by *Preset Frequency 4* (**P2.19**)
5	Analog 1 Percent	The frequency reference is derived from *T2 Analog Percentage 1* (**P1.15**)
6	Analog 2 Percent	The frequency reference is derived from *T4 Analog Percentage 2* (**P1.16**)
7	Frequency Input Percent	The frequency reference is derived from *T15 Frequency Input Percentage* (**P1.17**)
8	Up / Down Percent	The frequency reference is derived from *Up/Down Percentage* (**P1.18**)
9	PID Percent	The frequency reference is derived from *PID Percentage* (**P1.19**)
10	Up/Down % in Hz	The frequency reference is derived from the *Up/Down Percentage* (**P1.18**) and displayed in Hz when controlled by the keypad

Frequency Reference Configuration (**P0.05**) will set up the drive references and control terminal functions automatically and can be used to quickly configure the drive for the most common applications.

The changes to the control connections and details on increasing and decreasing the frequency reference for the particular configuration can be found below.

P0.05 = *Local/Remote* (1) Default

The primary frequency reference is a current input on analog input 1 where 4 mA = *Minimum Frequency Limit* (**P0.01**), and 20 mA = *Maximum Frequency Limit* (**P0.02**). The secondary frequency reference is a voltage input on analog input 2 where 0 V = Minimum Frequency Limit (P0.01), and 10 V = *Maximum Frequency Limit* (**P0.02**). Switch between the two references using digital input 5.

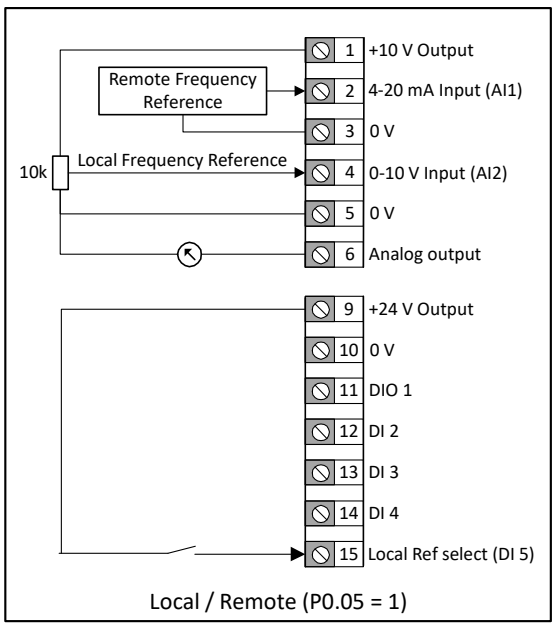

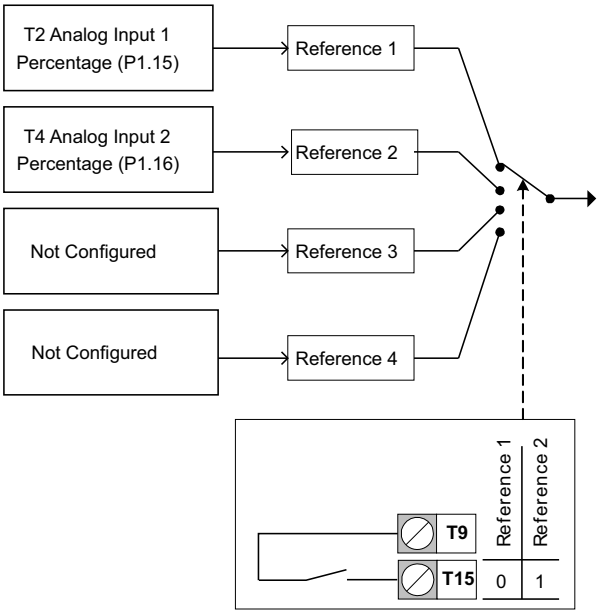

P0.05 = *Voltage Input & 3 Preset Speeds* (2)

The primary frequency reference is a voltage input on analog input 1 where 0 V = *Minimum Frequency Limit* (**P0.01**); and 10 V = *Maximum Frequency Limit* (**P0.02**). Using digital input 1 and digital input 5 the reference can be switched between the voltage input or three preset speeds.

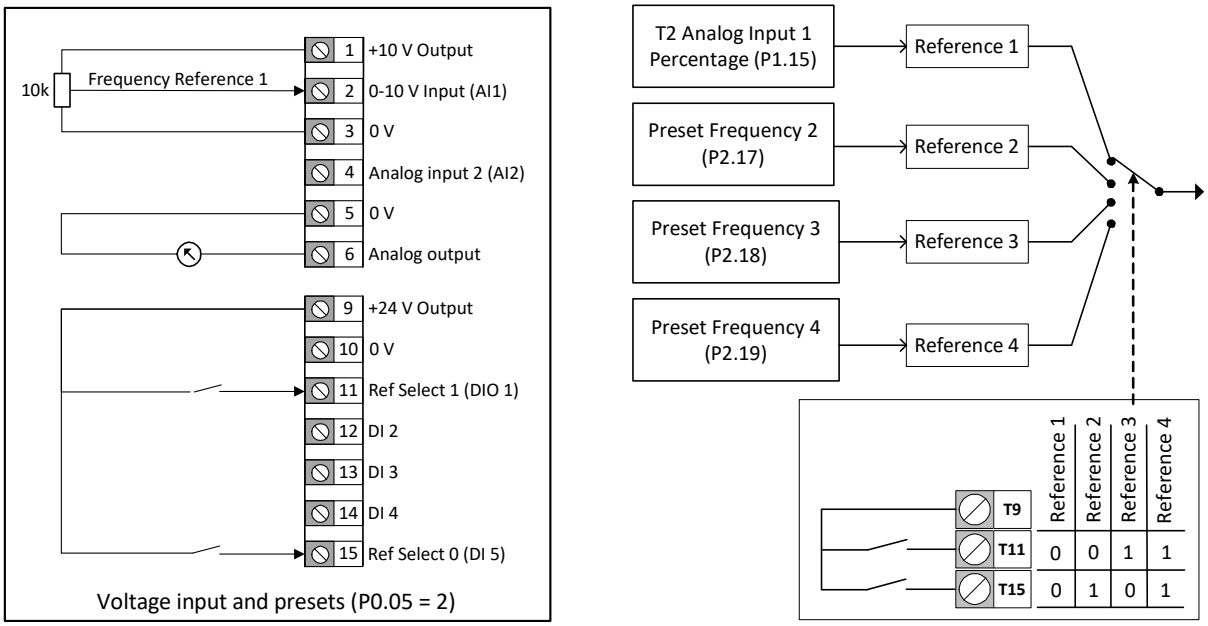

Voltage input and presets (P0.05 = 2)

P0.05 = *Current Input & 3 Preset Speeds* (3)

The primary frequency reference is a current input on analog input 1 where 4 mA = *Minimum Frequency Limit* (**P0.01**), and 20 mA = *Maximum Frequency Limit* (**P0.02**). Using digital input 1 and digital input 5 the reference can be switched between the current input or three preset speeds.

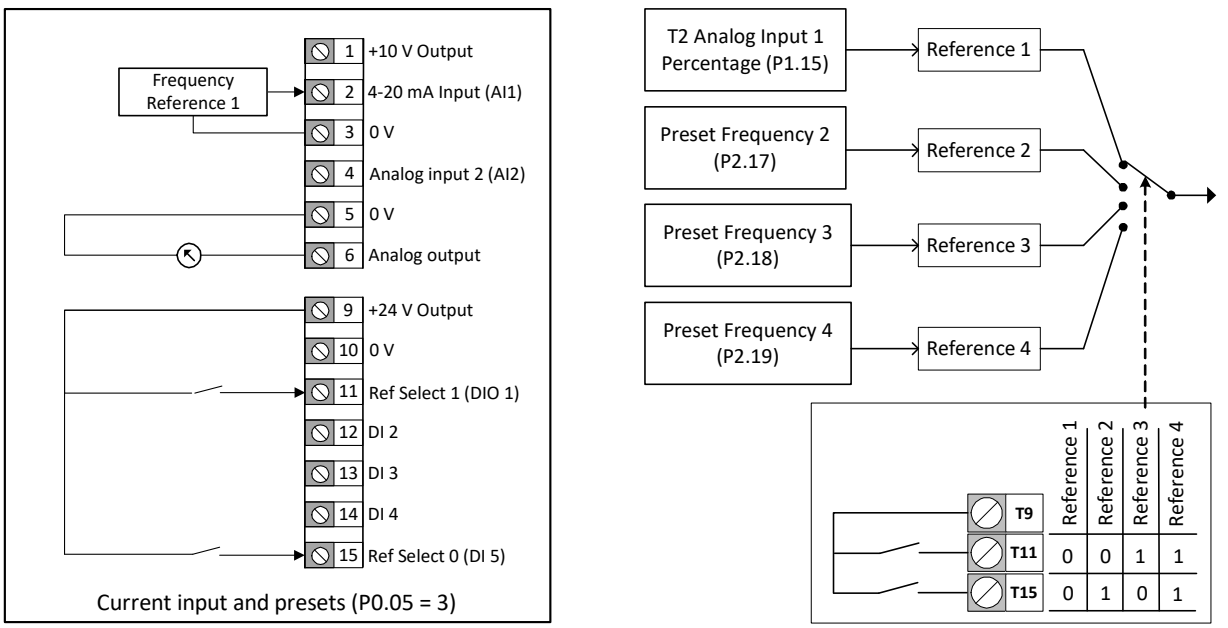

Current input and presets (P0.05 = 3)

P0.05 = *4 Presets* (4)

Switch between four preset speeds using digital input 1 and digital input 5.

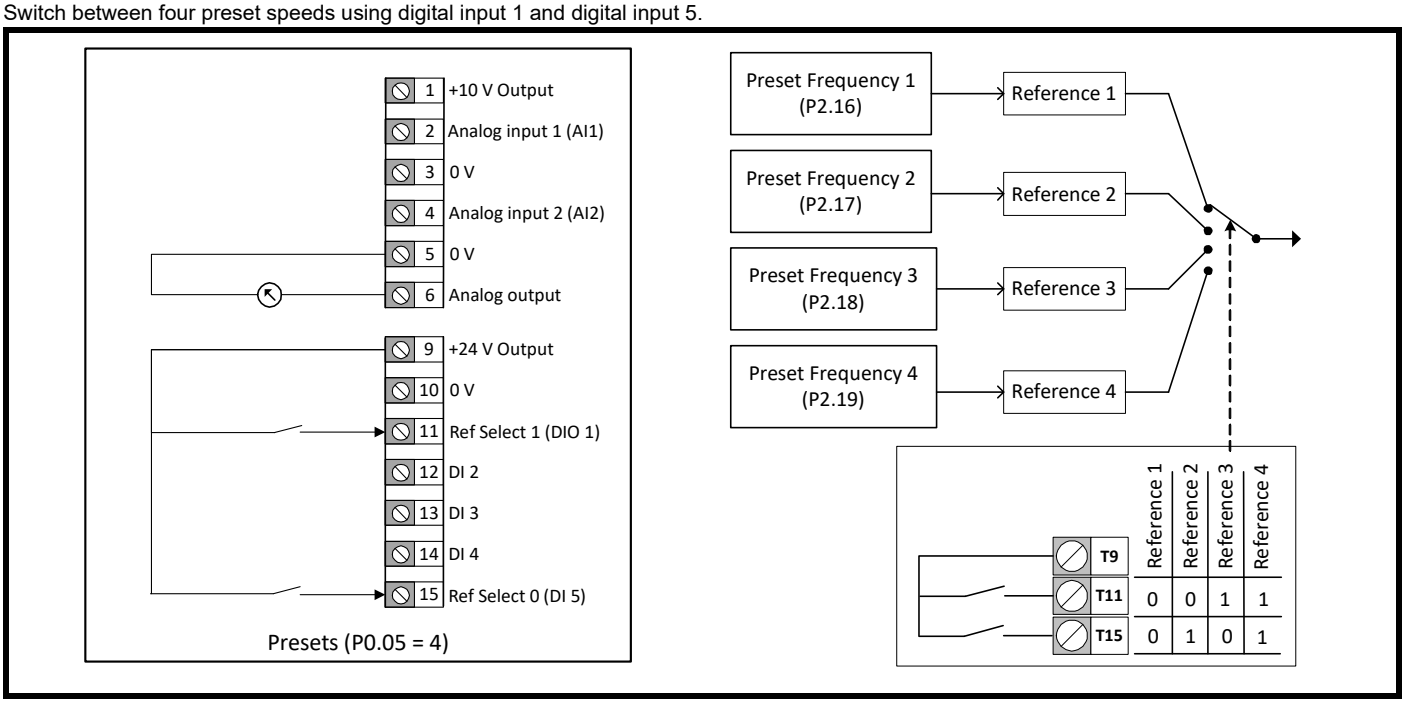

P0.05 = *Keypad* (5)

In Status view use the *UP* and *DOWN* buttons on the keypad to increase or decrease the *Up/Down Percentage* (**P1.18**) which defines the frequency reference, where 0 % = *Minimum Frequency Limit* (**P0.01**); and 100 % = *Maximum Frequency Limit* (**P0.02**). This setting does not change the Run and Stop commands. See section 6.3 *Running, stopping and controlling motor direction*.

No changes are made to the I/O for this setting.

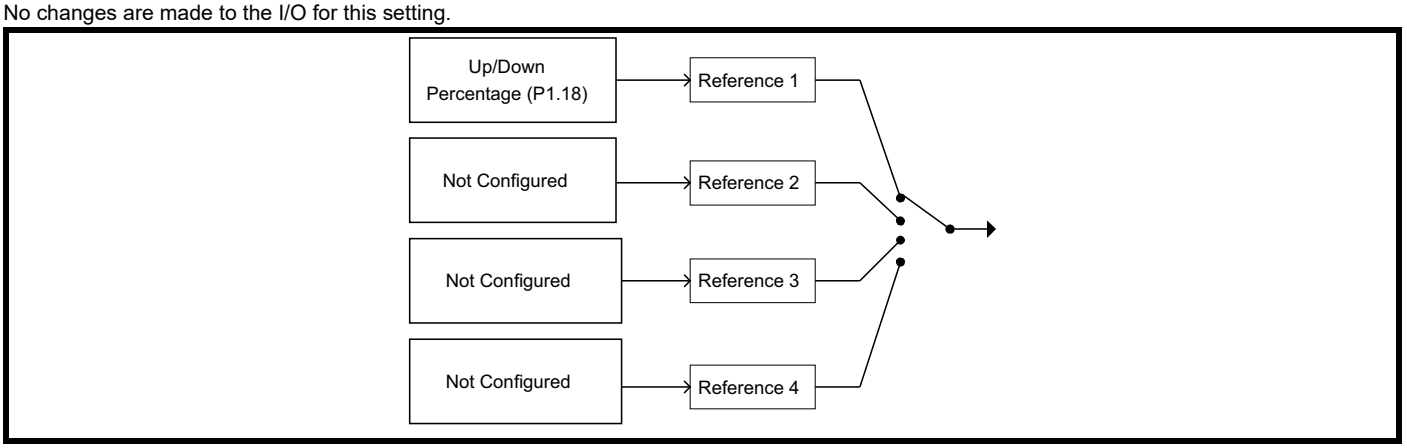

P0.05 = *Terminal Speed Control* (6)

The *Up/Down Percentage* (**P1.18**) is used as a frequency reference where 0 % = *Minimum Frequency Limit* (**P0.01**); and 100 % = *Maximum Frequency Limit* (**P0.02**). *Up/Down Percentage* (**P1.18**) is increased by a momentary switch on digital input 5 and decreased by a momentary switch on digital input 1.

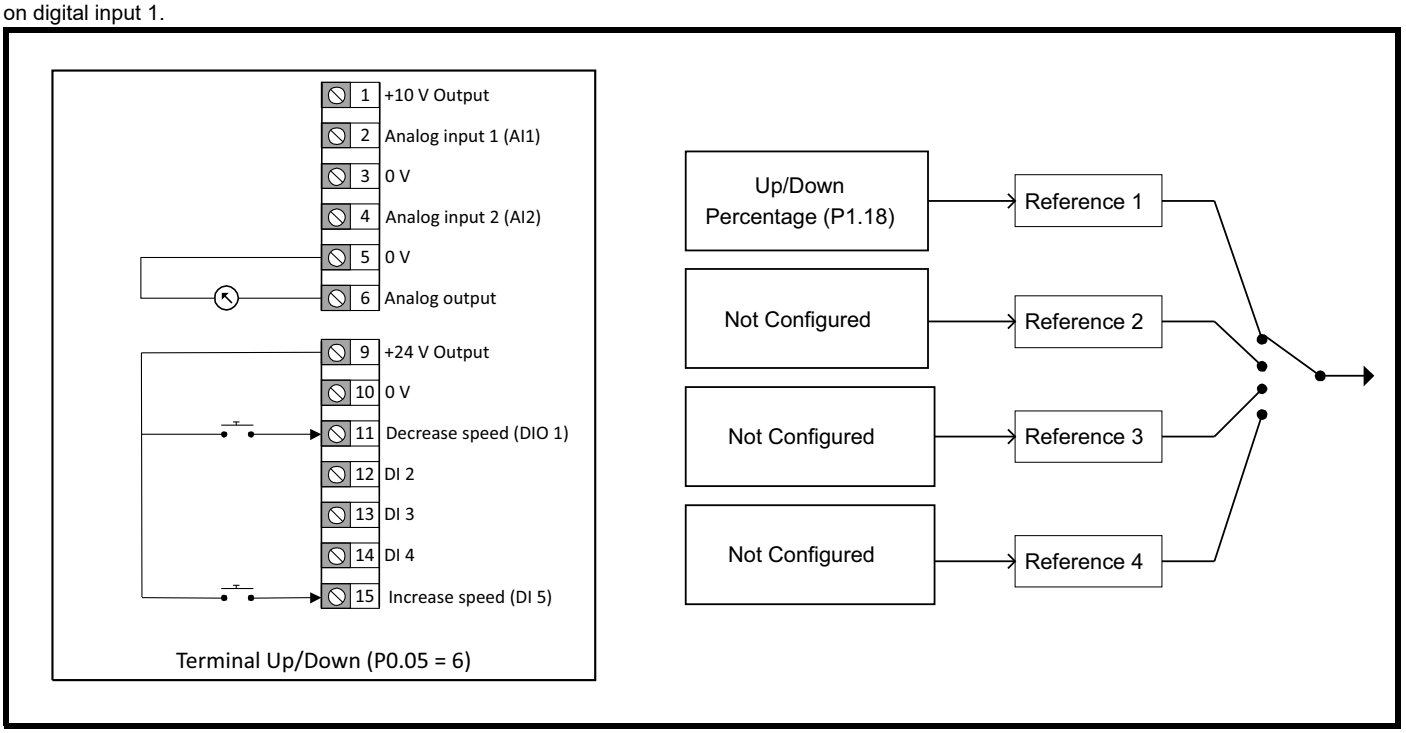

P0.05 = *Frequency Input* (7)

A frequency input on digital input 5 (terminal 15) provides the frequency reference where 0 kHz = *Minimum Frequency Limit* (**P2.01**) and 100 kHz = *Maximum Frequency Limit* (**P2.02**). To reduce the maximum frequency input on digital input 5, set *T15 Frequency Input Maximum Input* (**P6.31**) to the required level as a percentage of 100 kHz. (e.g. set to 50 % if the maximum frequency input should be 50 kHz)

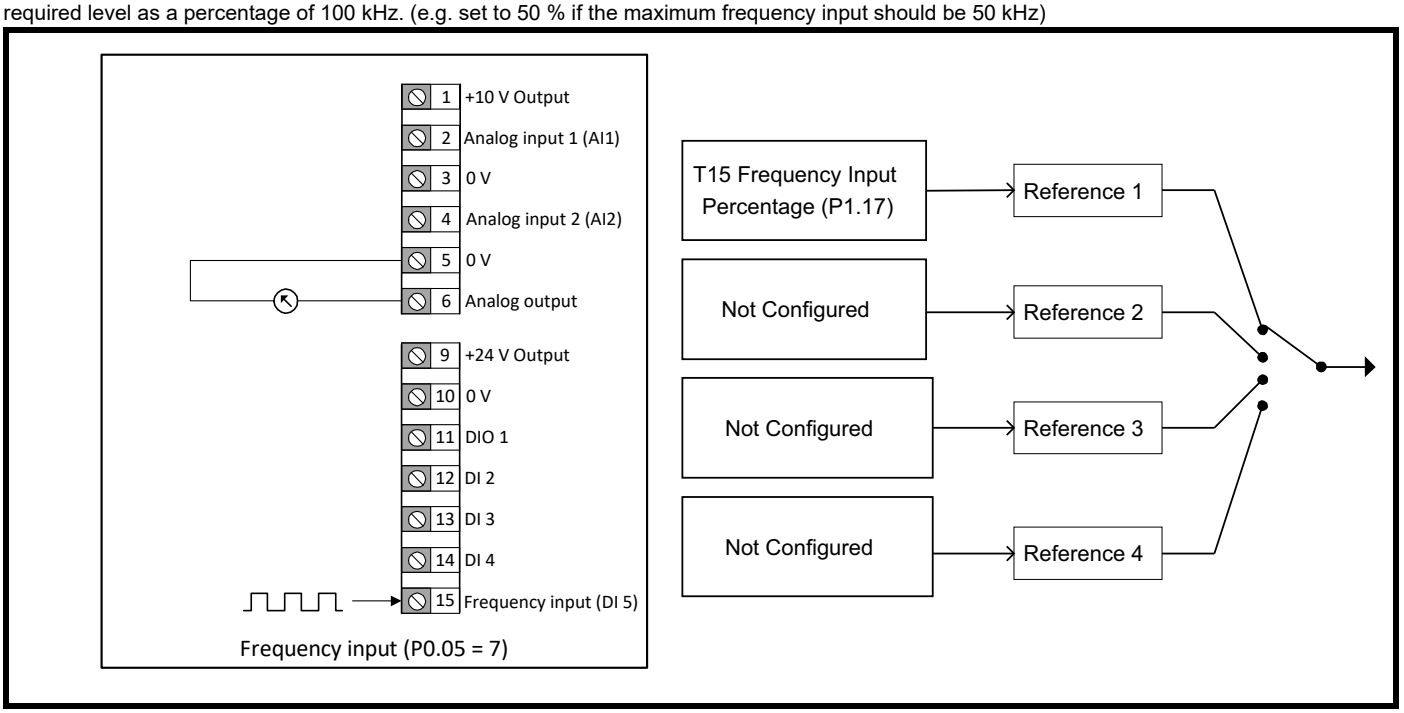

P0.05 = *PID with Current Feedback* & Voltage Reference (8)

A current input on analog input 2 provides feedback to the PID controller where 4 mA = 0 % and 20 mA = 100 %. A voltage input on analog input 1 provides the PID with a reference where 0 V = 0 % and 10 V = 100 %. The PID output is used as the frequency reference. For more details on PID setup, refer to section 7.3.5 *Menu 5 - PID controller*.

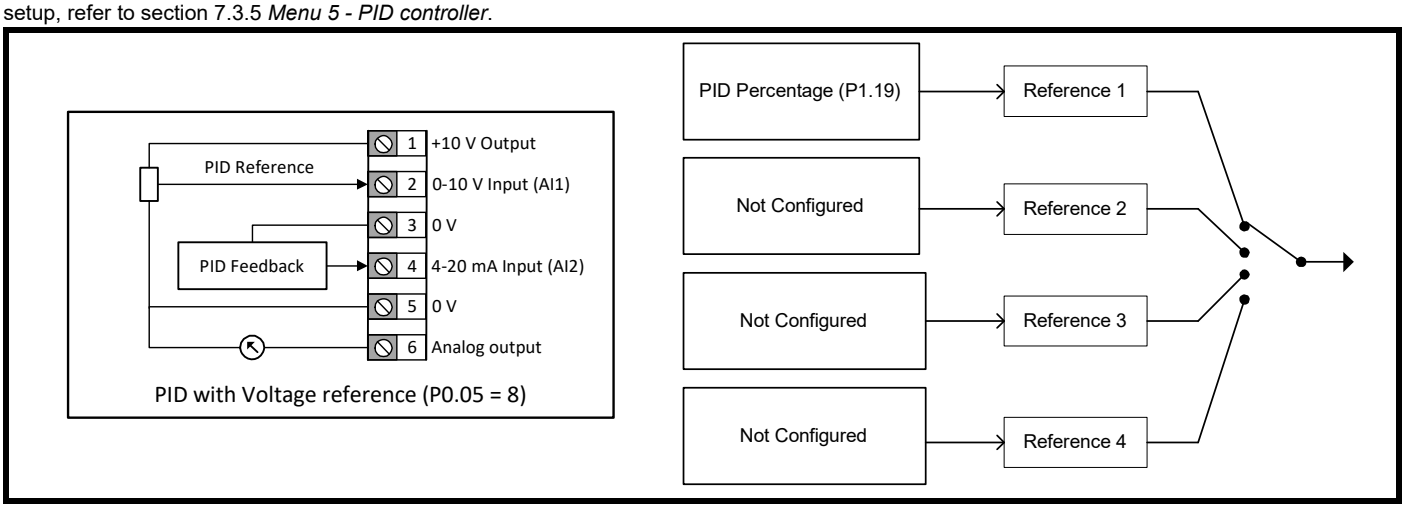

P0.05 = *PID with Feed Forward* (9)

Current input on analog input 2 provides the PID Feedback for the PID Controller. A feed forward term is controlled by a voltage input on analog input 1. The PID reference in this configuration is set by *PID Fixed Reference Setpoint 1* (**P5.01**). The PID output is used as the frequency reference. For more details on PID setup, refer to section 7.3.5 *Menu 5 - PID controller*.

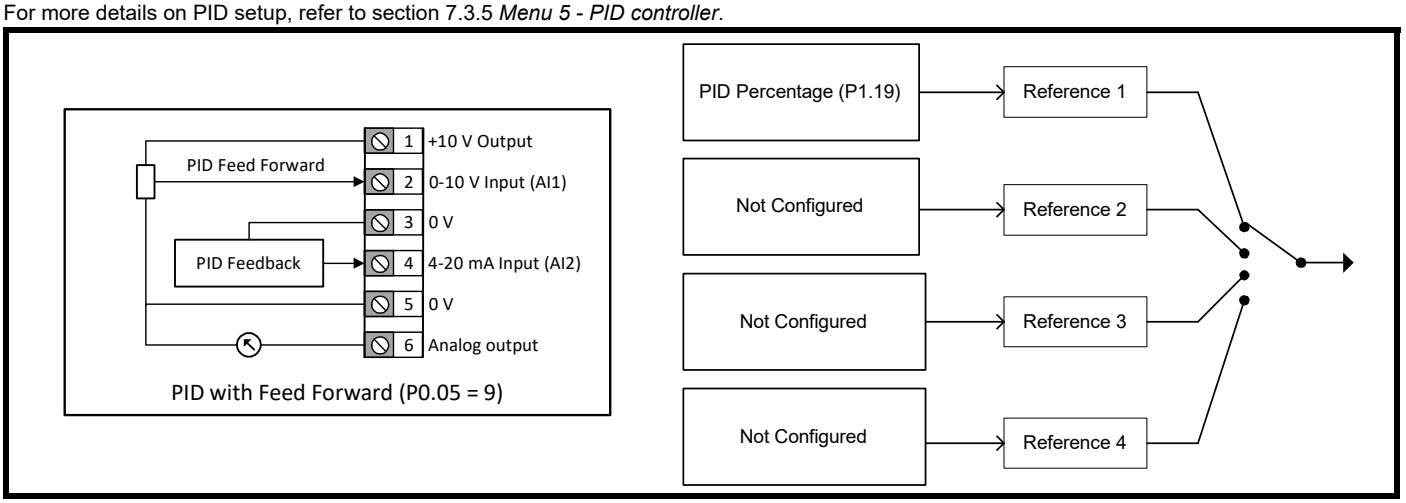

6.3 Running, stopping and controlling motor direction

The user is able to provide a range of signals that instruct the drive to run and the direction to rotate the motor. These signals can be supplied with the control terminals, the keypad buttons or a *Binary Control Word* (**P4.18**) via communications. The signals that can be provided to the drive are listed in Table 6-2.

Table 6-2 Input Functions

Function	Description
Hardware Enable (1)	If configured the drive will not run without an active Hardware Enable signal.
Run Permit (Not Stop) (4)	If configured the drive will not run without an active Run Permit signal. Run Forward (2), Run Reverse (3) and Run (16) signals are held active allowing for a momentary press (button operated), so in order to stop the drive the Run Permit signal must be removed.
Run Forward (2)	When active the drive will run forward at the selected reference.
Run Reverse (3)	When active the drive will run reverse at the selected reference.
Run (16)	When active the drive will run at the selected reference. The direction is forward by default, but this can be changed to reverse if there is an active Reverse (17) signal.
Reverse (17)	When active the motor direction will reverse if there is an active Run (16) signal.
Jog Forward (18)	When active the drive will run forward at the *Jog Frequency* (**P2.13**).
Jog Reverse (19)	When active the drive will run reverse at the *Jog Frequency* (**P2.13**).

The user can only use the keypad buttons to provide Run, Stop and Jog Forward signals, but the Stop button will only stop the drive if the keypad buttons were used to run the drive.

Making the drive run can be a single-step or two-step process. If an enable signal is configured as a function of a digital input, the drive display will show inh (inhibit) and the enable signal needs to be active before the drive is able to run or jog. If an enable is not configured, the drive display will show rdy (ready) and the drive will run when any run or jog signal is provided.

The direction can be controlled either by the type of run or jog signal supplied or by the direction input. The direction input is not able to override an explicit signal such as Run Forward (2).

Run/Stop Configuration (**P0.10**) can be used to quickly configure the control inputs that allow the motor to run to match an application and local wiring regulations.

Run/Stop Configuration (**P0.10**) changes the functions of T12 Digital Input 2, T13 Digital Input 3, T14 Digital Input 4 and the Keypad Run and Stop buttons. The changes to the control connections and details on running and stopping the drive in each configuration can be found below.

P0.10 = Enable, Run Forward & Run Reverse (1) Default

The drive will not be able to run without an active Enable signal on digital input 2. Run the drive using a Run Forward signal on digital input 3 or a Run Reverse signal on digital input 4.

If both Run Forward and Run Reverse signals are active at the same time, the drive will decelerate to 0 Hz (STOP) until one signal is removed.

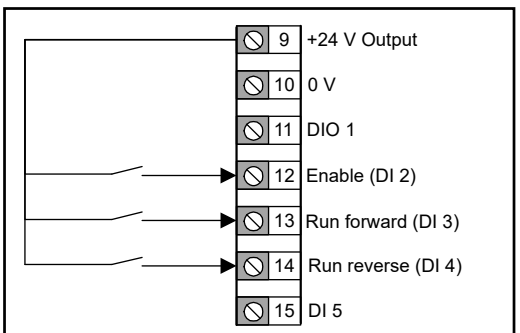

Enable and RF/RR Signals (P6.13 = 1)

P0.10 = *Run Forward & Run Reverse (3-Wire*) (2)

When a Run Permit signal is active, a Run signal (Run Forward or Run Reverse) will latch and remain active until the Run Permit becomes inactive, even if the Run signal itself is removed. This allows for a momentary switch or a button to be used to provide the run signals. If the drive is running forward and a Run Reverse is triggered, the drive will decelerate to 0 Hz using the selected deceleration rate then immediately accelerate to the inverse of the reference using the selected acceleration rate.

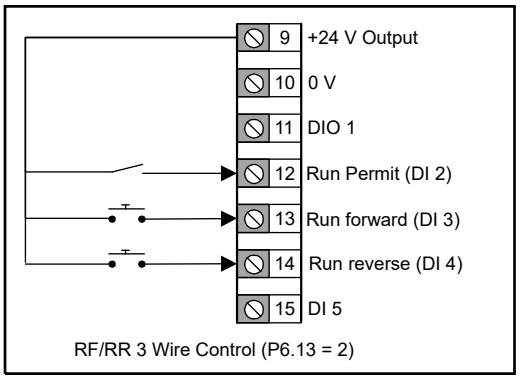

P0.10 = *Enable, Run & Reverse* (3)

The drive will not be able to run without an active Enable signal on digital input 2. A Run signal is provided by an active signal on digital input 3. The direction of the run is controlled by digital input 4 where an active signal will invert the reference, i.e. reverses the direction.

If the drive is running forward and a Reverse is triggered, the drive will decelerate to 0 Hz using the selected deceleration rate then immediately accelerate to the inverse of the reference using the selected acceleration rate.

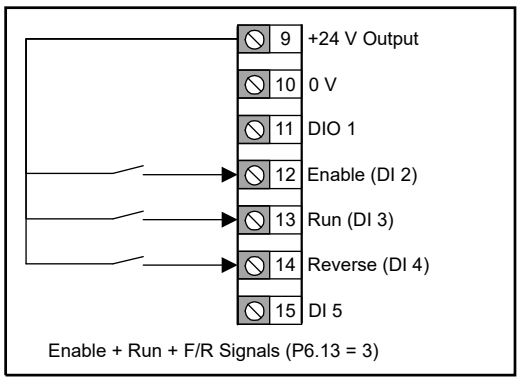

P0.10 = Run & Reverse *(3-Wire)* (4)

When the Run Permit signal on digital input 2 is active, an active Run signal on digital input 3 will latch and remain active until the Run Permit signal is removed. The direction of the run is controlled by the signal on digital input 4 where an *Off* is forward and an *On* is reverse.

If the drive is running forward and a Reverse is triggered, the drive will decelerate to 0 Hz using the selected deceleration rate then immediately accelerate to the inverse of the reference using the selected acceleration rate.

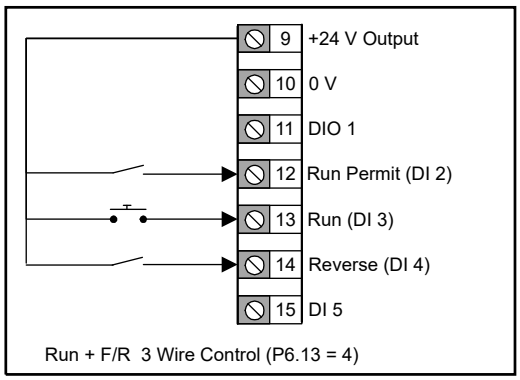

P0.10 = *Run & Jog* (5)

When the Run Permit signal on digital input 2 is active, an active Run signal on digital input 3 will latch and remain active until the Run Permit signal is removed. The direction will always be forward unless the frequency reference is negative. A reverse input could be configured on another input using a digital input Function Select Parameter (**P6.14**-**P6.20**) if the input is not already in use.

If the jog signal is active on digital input 4, the motor will run at the *Jog Frequency* (**P2.13**) (Default = 1.5 Hz). The Run Permit signal does not have any effect on the jog signal.

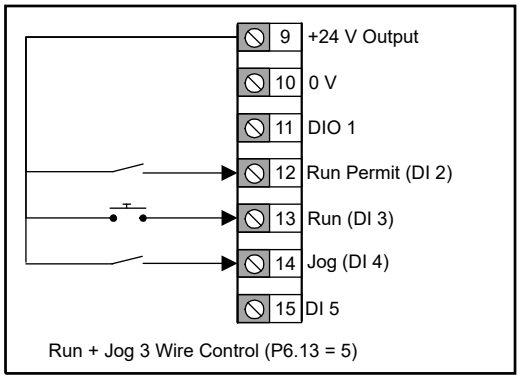

Run + Jog 3 Wire Control (P6.13 = 5)

P0.10 = *Run Forward & Run Reverse (2-Wire)* (6)

The drive will run forward with an active signal on digital input 3 or the drive will run reverse with an active signal on digital input 4. If both signals are active at the same time the drive will decelerate to 0 Hz using the selected deceleration rate until one of the signals is removed.

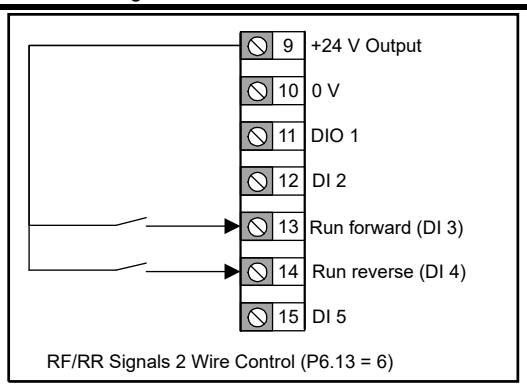

RF/RR Signals 2 Wire Control (P6.13 = 6)

P0.10 = *Run & Reverse (2-Wire)* (7)

A Run signal is provided by an active signal on digital input 3. The direction of the run is controlled by digital input 4 where an active signal will invert the reference, i.e. reverses the direction.

If the drive is running forward and the Reverse is triggered, the drive will decelerate to 0 Hz using the selected deceleration rate then immediately accelerate to the inverse of the reference using the selected acceleration rate.

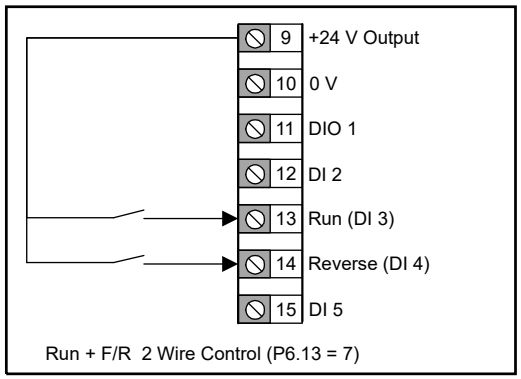

Run + F/R 2 Wire Control (P6.13 = 7)

P0.10 = *Keypad* (8)

No control connections are required for this setting. A latched run signal is provided by a combined press of the *UP* & *DOWN* buttons. The Run signal will be removed when the Stop button is pressed. The frequency reference is not changed to a keypad reference by this setting. This should be configured by *Frequency Reference Configuration* (**P0.05**).

P0.10 = *Keypad with Enable* (9)

If the drive is enabled using digital input 2, a combined press of the *UP* & *DOWN* buttons will make the drive run. The Run signal can be removed when the Stop button is pressed and the drive will decelerate at the selected deceleration rate. If the enable signal is removed while the drive is running, the motor will coast to a stop.

The frequency reference is not changed to a keypad reference by this setting. This should be configured by *Frequency Reference Configuration* (**P0.05**).

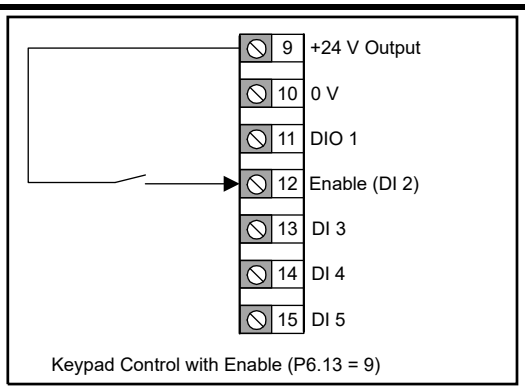

Keypad Control with Enable (P6.13 = 9)

P0.10 = *Keypad Jog* (10)

Hold the *UP* & *DOWN* buttons together to run the motor at *Jog Frequency* (**P2.13**). This can be used to provide a quick spin test once the motor rating data has been set in the drive.

6.4 Connecting motor thermistors

To protect the motor, the drive will estimate the temperature of the motor and limit the overload period available when the temperature estimate crosses a threshold. If the motor is to be run at a low speed with a heavy load or to protect against a motor fan failure, additional protection using an embedded motor thermistor may be required. The thermistor used by motor manufacturers may vary. To connect a PTC or NTC thermistor follow the steps below:

STEP 1: Wiring the thermistor.

- Connect the thermistor at R_2 and a resistor at R_1 shown in Figure 6-1. The resistor at R_1 would ideally be equal to the nominal resistance of R_2 but may need to be increased so that the total resistance between T1 and T5 remains greater than 2 kΩ to avoid overloading the +10 V circuit.

Figure 6-1 Connecting a thermistor

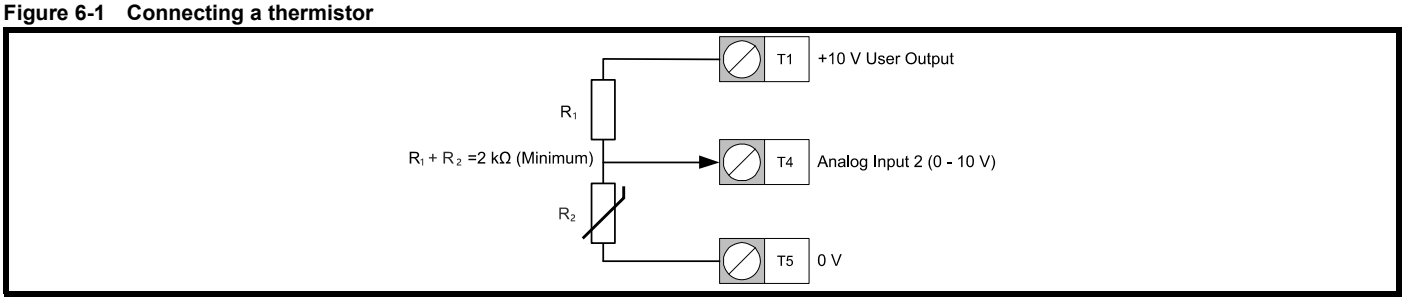

STEP 2: Input setup

- Ensure *Analog Input 2 Type* (**P6.02**) is set to Voltage (0).

STEP 3:

- Set *Threshold Detector Selector* (**P5.12**) to Analog 2 Percentage (9).
- Set *Threshold Detector Level* (**P5.13**) to the level at which the error should occur and the drive should stop running the motor. The level can be calculated from the equation below:

$$\textbf{\textit{Threshold Detector Level}}\ \textbf{(P5.13)} = \frac{R_2}{R_1 + R_2} \times 100$$

Where

R_1 = The resistance of R_1

R_2 = The resistance of the thermistor when the error should occur.

- Set *Threshold Detector Function Select* (**P5.17**) to External Error (14)
- For an NTC thermistor, or a thermistor where the resistance decreases as the temperature increases, set *Threshold Detector Output Invert* (**P5.16**) to 1.

7 Drive parameters

Parameters are variables within the drive that can be used to monitor output levels and drive statuses or to control the settings within the drive. Parameters are divided into six menus based on their function, these menus are:

Menu 1 - Status & Monitoring (All read-only parameters)

Menu 2 - References and Ramps

Menu 3 - Motor Setup

Menu 4 - General

Menu 5 - PID Controller

Menu 6 - IO Configuration

There is also a FastStart menu (Menu 0) that contains shortcuts to ten parameters used for basic drive setup. Because parameters in Menu 0 are shortcuts, changing the value of the parameter in menu 0 will also change the value in its original menu and vice versa.

7.1 Menu 0 - FastStart

For a description of a parameter in menu 0, refer to the alternative location of the parameter in section 7.3 *Parameter descriptions*.

Parameter		Range	Default	Alternative Location
P0.01	Minimum Frequency Limit	0.0 to 300.0 Hz	0 Hz	P2.01
P0.02	Maximum Frequency Limit	0.0 to 300.0 Hz	50 Hz: 50.0 Hz, 60 Hz: 60.0 Hz	P2.02
P0.03	Acceleration Rate 1	0.0 to 1999.9 s/Hz(max)	5.0 s/Hz (max)	P2.07
P0.04	Deceleration Rate 1	0.0 to 1999.9 s/Hz(max)	10.0 s/Hz (max)	P2.08
P0.05	Frequency Reference Configuration	Custom (0), Local/Remote (1), Voltage/Preset Input (2), Current/Preset Input (3), Presets (4), Keypad (5), Terminal Up/Down (6), Frequency Input (7), PID Voltage Ref. (8), PID + Feed Forward (9)	Local / Remote (1)	P2.03
P0.06	Motor Rated Current	0.00 to Drive Rated Current A	Rating Dependent	P3.01
P0.07	Motor Rated Speed	0 to 18000 rpm	50 Hz: 1500 rpm, 60 Hz: 1800 rpm	P3.02
P0.08	Motor Rated Voltage	0 to Drive Rated Voltage V	Rating Dependent	P3.03
P0.09	Motor Rated Power Factor	0.00 to 1.00	0.80	P3.04
P0.10	Run/Stop Configuration	Custom (0), Enable + Run Forward + Run Reverse (1), Run Forward + Run Reverse (3 Wire) (2), Enable + Run + Reverse (3), Run + Reverse (3 Wire) (4), Run + Jog (3 Wire) (5), Run Forward + Run Reverse (2 Wire) (6), Run + Reverse (2 Wire) (7), Keypad (8), Keypad With Enable (9), Keypad Jog (10)	Enable + Run Forward + Run Reverse (1)	P6.13

7.2 Single line parameter descriptions

The lists below contain all parameters within the drive and states the possible settings of the parameter with the default value. For further description of the parameters refer to section 7.3 *Parameter descriptions* or use the Marshal app.

WARNING

The lists in this table are for reference only and do not include sufficient information for adjusting these parameters. Incorrect adjustment can affect the safety of the system and damage the drive and or external equipment. Before attempting to adjust any of these parameters, refer to section 7.3 *Parameter descriptions*.

7.2.1 Menu 1 - Status & monitoring (Read-only)

	Parameter	Range
P1.01	Output Frequency	± *Maximum Frequency Reference* (**P2.02**) Hz
P1.02	Output Voltage	0 to Maximum Output Voltage V (110 V, 200 V Drive = 240 V, 400 V Drive = 480 V)
P1.03	Output Power	Drive Rating Dependent kW
P1.04	Motor RPM	±18000 rpm
P1.05	Drive State	Inhibited (0), Ready (1), NA (2), NA (3), Running (4), Supply Loss (5), Deceleration (6), Injecting DC (7), NA (8), Error (9), NA (10), NA (11), NA (12), NA (13), NA (14), Under Voltage (15)
P1.06	Output Current	± Drive Rated Current x 2.2 A
P1.07	Torque Producing Current	± Drive Rated Current x 2.2 A
P1.08	Percentage Load	± Torque Current Maximum Limit %
P1.09	Alarm Indicators	00000000 to 11111111
P1.10	Drive Status Indicators	00000000 to 11111111
P1.11	Sequencer Input and Output Indicators	00000000 to 11111111
P1.12	Run & Direction Indicators	00000000 to 11111111
P1.13	Ramp Input	± *Maximum Frequency Reference* (**P2.02**) Hz
P1.14	Ramp Output	± *Maximum Frequency Reference* (**P2.02**) Hz
P1.15	T2 Analog Input 1 Percentage	±100.00 %
P1.16	T4 Analog Input 2 Percentage	±100.00 %
P1.17	T15 Frequency Input Percentage	±100.00 %
P1.18	Up/Down Percentage	0.0 to 100.0 %
P1.19	PID Output Percentage	±100.00 %
P1.20	PID Status Indicators	00000000 to 11111111
P1.21	PID Error	±100.00 %
P1.22	Motor Thermal Percentage	0 to 100 %
P1.23	Drive Thermal Percentage	0 to 100 %
P1.24	DC Bus Voltage	0 to Maximum D.C. Bus Voltage V (110 V, 200 V Drive = 415 V, 400 V Drive = 830 V)
P1.25	Digital IO Indicators	00000000 to 11111111
P1.26	Parameter 1 Saved Value on Error	Dependent on parameter saved
P1.27	Parameter 2 Saved Value on Error	Dependent on parameter saved
P1.28	Parameter 3 Saved Value on Error	Dependent on parameter saved
P1.29	Error	0 to 255
P1.30	Error History 1	0 to 255
P1.31	Error History 2	0 to 255
P1.32	Error History 3	0 to 255
P1.33	Drive Diagnostic	0 to 17
P1.34	Energy Usage	-320.00 to 320.00 kWh

7.2.2 Menu 2 - Reference & ramps

Parameter		Range	Default
P2.01	Minimum Frequency Limit	0.0 to 300.0 Hz	0.0 Hz
P2.02	Maximum Frequency Limit	0.0 to 300.0 Hz	50 Hz: 50.0 Hz 60 Hz: 60.0 Hz
P2.03	Frequency Reference Configuration	Custom (0), Local/Remote (1), Voltage/Presets (2), Current/Presets (3), Presets (4), Keypad (5), Terminal Up/Down (6), Frequency Input (7), PID Voltage Ref. (8), PID + Feed Forward (9)	Local/Remote (1)
P2.04	Stopping Mode Selector	Coast (0), Ramp (1), Ramp & DC Brake (2), Brake + StopDetect (3), Timed DC Brake (4) Distance (5)	Ramp (1)
P2.05	S-Ramp Percentage	0.0 to 50.0 %	0.0 %
P2.06	Acceleration Rate 1	0.0 to 1999.9 s	5.0 s
P2.07	Deceleration Rate 1	0.0 to 1999.9 s	10.0 s
P2.08	Acceleration Rate 2	0.0 to 1999.9 s	5.0 s
P2.09	Deceleration Rate 2	0.0 to 1999.9 s	10.0 s
P2.10	Ramp Rate Selector	DI Select (0), Ramp Rates 1 (1), Ramp Rates 2 (2)	DI Select (0)
P2.11	Deceleration Ramp Type	Fast (0), Standard Ramp (1), Standard Ramp + Motor Loss (2)	Standard Ramp (1)
P2.12	Standard Ramp Voltage	0 to DC Bus Voltage (Max) V	Rating Dependent
P2.13	Jog Frequency	± *Maximum Frequency Reference* (**P2.02**) Hz	1.5 Hz
P2.14	Up/Down Percent Configuration	Reset (0), Last (1), Preset 1 (2), Keypad and Reset (3), Keypad and Last (4), Keypad and Preset 1 (5)	Reset (0)
P2.15	Up/Down Percentage Time to Max	0 to 250 s	20 s
P2.16	Preset Frequency 1	± *Maximum Frequency Reference* (**P2.02**) Hz	5.0 Hz
P2.17	Preset Frequency 2		10.0 Hz
P2.18	Preset Frequency 3		25.0 Hz
P2.19	Preset Frequency 4		50.0 Hz
P2.20	Frequency Reference 1 to 8 Selector	Binary (0), Freq. Reference 1 (1), Freq. Reference 2 (2), Freq. Reference 3 (3), Freq. Reference 4 (4) , Preset 5 (5), Preset 6 (6), Preset 7 (7), Preset 8 (8)	Binary (0)
P2.21	Frequency Reference 1 Selector	None (0), Preset 1 (1), Preset 2 (2), Preset 3 (3), Preset 4 (4), T2 Analog 1 % (5), T4 Analog 2 % (6), T15 Frequency % (7), Up/Down % (8), PID Percent (9), Up/Down % in Hz (10)	T2 Analog 1 % (5)
P2.22	Frequency Reference 2 Selector		T4 Analog 2 % (6)
P2.23	Frequency Reference 3 Selector		None (0)
P2.24	Frequency Reference 4 Selector		None (0)
P2.25	Skip Frequency	0.0 to *Maximum Frequency Reference* (**P2.02**) Hz	0.0 Hz
P2.26	Skip Frequency Band	0.0 to 25.0 Hz	0.5 Hz
P2.27	Fire Mode Reference	± *Maximum Frequency Limit* (**P2.02**) Hz	0.0 Hz
P2.28	Preset Frequency 5	± *Maximum Frequency Reference* (**P2.02**) Hz	0.0 Hz
P2.29	Preset Frequency 6		0.0 Hz
P2.30	Preset Frequency 7		0.0 Hz
P2.31	Preset Frequency 8		0.0 Hz

7.2.3 Menu 3 - Motor setup

	Parameter	Range	Default
P3.01	Motor Rated Current	0.00 to Drive Rated Current (A)	Rating Dependent
P3.02	Motor Rated Speed	0 to 18000 rpm	Region Dependent
P3.03	Motor Rated Voltage	0 to Maximum Drive Output Voltage	Rating Dependent
P3.04	Motor Rated Power Factor	0.00 to 1.00	Rating Dependent
P3.05	Motor Control Mode	Resistance Comp (0), Linear V to F (1), Square V to F (2)	Linear V to F (1)
P3.06	Motor Starting Boost	0.0 to 25.0 %	3.0 %
P3.07	Motor Starting Boost End Voltage	0.0 to 100.0 %	50.0 %
P3.08	Motor Starting Boost End Frequency	0.0 to 100.0 %	50.0 %
P3.09	Perform Auto-tune	Off (0) or On (1)	Off (0)
P3.10	Energy Optimizer	Off (0) or On (1)	Off (0)
P3.11	Catch An Already Spinning Motor	Disabled (0), Enabled (1), Forward Only (2), Reverse Only (3)	Disabled (0)
P3.12	PWM Switching Frequency	4 kHz (Frame 1-3) 3 kHz (Frame 4) (0) 12 kHz (Frame 1-3) 9 kHz (Frame 4) (1)	4 kHz (Frame 1-3) 3 kHz (Frame 4) (0)
P3.13	DC Braking Current Level	0.0 to 150.0 %	100.0 %
P3.14	DC Braking Time	0.0 to 100.0 s	1.0 s
P3.15	Motor Rated Frequency	0.0 to 300.0 Hz	Region Dependent
P3.16	Number Of Motor Poles	0 to 8	0 (Automatic)
P3.17	Torque Current Limit	0.0 to Torque Current Maximum Limit %	Rating Dependent
P3.18	Stator Resistance	0.00 to 199.99 Ω	2.00 Ω
P3.19	Motor Stability Optimizer	Off (0) or On (1)	Off (0)
P3.20	Reverse Motor Direction	Off (0) or On (1)	Off (0)
P3.21	Thermal Protection Action	Disabled (0), Error with Save (1), Error (2), Limit with Save (3), Limit (4)	Limit with Save (3)
P3.22	Low Frequency Thermal Protection	Off (0) or On (1)	On (1)
P3.23	Current Controller Gain	0 to 250	40
P3.24	Motor Pre-Heat Current Magnitude	0 to 100 %	5 %

7.2.4 Menu 4 - General

	Parameter	Range	Default
P4.01	Restore Factory Defaults	None (0), 50 Hz (1), 60 Hz (2)	None (0)
P4.02	Security PIN	0 to 9999	0
P4.03	Serial Node Address	1 to 247	1
P4.04	Serial Mode	8.2NP (0), 8.1NP (1), 8.1EP (2), 8.1OP (3)	8.2NP (0)
P4.05	Serial Baud Rate	Disabled (0), 600 (1), 1200 (2), 2400 (3), 4800 (4), 9600 (5), 19200 (6), 38400 (7), 57600 (8), 76800 (9), 115200 (10)	115200 (10)
P4.06	Minimum Serial Comms Transmit Delay	0 to 250 ms	0 ms
P4.07	Keypad Run and Stop Function Select	None (0), Run and Stop (1), Jog (2)	None (0)
P4.08	Supply Loss Action	Disable (0), Ramp Stop (1), Ride Through (2)	Disable (0)
P4.09	Parameter 1 Save on Error Selector	None (0), Output Frequency (1), Output Voltage (2), Output Power (3), Motor RPM (4), Drive State (5), Output Current (6), Torque Current (7), Percentage Load (8), Alarm Indicators (9), Status Indicator (10), Seq. Indicators (11), Run and Direction (12), Ramp Input (13), Ramp Output (14), T2 Analog 1 % (15), T4 Analog 2 % (16), T15 Frequency % (17), Up/Down % (18), PID Percentage (19), PID Indicators (20), PID Error (21), Motor Thermal % (22), Drive Thermal % (23), DC Bus Voltage (24), IO Indicators (25)	Ramp Output (14)
P4.10	Parameter 2 Save on Error Selector		Output Current (6)
P4.11	Parameter 3 Save on Error Selector		D.C. Bus Voltage (24)
P4.12	Number of Auto Reset Attempts	None (0), One (1), Two (2), Three (3), Four (4), Five (5), Unlimited (6)	None (0)
P4.13	Hold Drive Healthy on Auto Reset Attempts	Off (0) or On (1)	Off (0)
P4.14	Drive Reset When Enable or Run Applied	Off (0) or On (1)	On (1)
P4.15	Motor Phase Loss Detection	Off (0) or On (1)	Off (0)
P4.16	User Error	0 to 255	0
P4.17	Drive Enable	Off (0) or On (1)	On (1)
P4.18	Binary Control Word	0 to 65535 (Binary 16 bit)	0
P4.19	Save Parameters	Off (0) or On (1)	Off (0)
P4.20	Near Field Communication (NFC)	Disabled (0), Read Only (1), Read & Write (2)	Read & Write (2)
P4.21	Power Up Action	Allow Run (0) Re-apply Run (1)	Allow Run (0)
P4.22	Reset Energy Usage	0 to 1	0

7.2.5 Menu 5 - PID controller

Parameter		Range	Default
P5.01	PID Fixed Reference Set-Point 1	±100.00 %	0.00 %
P5.02	PID Fixed Reference Set-Point 2	±100.00 %	0.00 %
P5.03	PID Reference Selector	None (0), T2 Analog 1 % (1), T4 Analog 2 % (2), T15 Frequency % (3), Up/Down % (4), Fixed Ref 1 (5), Fixed Ref 2 (6)	Fixed Reference 2 (6)
P5.04	PID Feedback Selector	None (0), T2 Analog 1 % (1), T4 Analog 2 % (2), T15 Frequency % (3)	None (0)
P5.05	PID Feed Forward Selector	None (0), T2 Analog 1 % (1), T4 Analog 2 % (2), T15 Frequency % (3), Up/Down % (4), Fixed Ref 1 (5), Fixed Ref 2 (6)	None (0)
P5.06	PID Reference Slew Rate Limit	0.0 to 3200.0 s	0.0 s
P5.07	PID Proportional Gain	0.000 to 4.000	1.000
P5.08	PID Integral Gain	0.000 to 4.000	0.500
P5.09	PID Output Lower Limit	±100.00 %	0.00 %
P5.10	PID Output Upper Limit	0.00 to 100.00 %	100.00 %
P5.11	PID Enable Selector	Disabled (0), Drive Running (1), At Speed (2), At Zero (3), Under Voltage (4), External Error (5), Drive Ready (6), Drive Healthy (7), Current Limit (8), Reverse Running (9),Current Loss (10), Threshold Detect (11)	Disabled (0)
P5.12	Threshold Detector Selector	None (0), Ramp Input (1), Ramp Output (2), Output Frequency (3), Output Current (4), Torque Current (5), Output Voltage (6), DC Bus Voltage (7), T2 Analog 1 % (8), T4 Analog 2 % (9), T15 Frequency % (10), Output Power (11), Motor RPM (12), Percentage Load (13), PID Percentage (14), PID Error (15)	None (0)
P5.13	Threshold Detector Level	0.00 to 100.00 %	0.00 %
P5.14	Threshold Detector Hysteresis	0.00 to 25.00 %	0.00 %
P5.15	Threshold Detector Delay	±3000.0 s	0.0 s
P5.16	Threshold Detector Output Invert	Off (0) or On (1)	Off (0)
P5.17	Threshold Detector Function Select	None (0), Hardware Enable (1), Run Forward (2), Run Reverse (3), Run Permit (4), Forward Limit Switch (5), Reverse Limit Switch (6), Up/Down % Increase (7), Up/Down % Decrease (8), Up/Down % Reset (9), Ref Switch Bit 0 (10), Ref Switch Bit 1 (11), Ramp Select (12), PID Enable (13), External Error (14), Drive Reset (15), Run (16), Reverse (17), Jog Forward (18), Jog Reverse (19), Fire Mode (20), Motor Pre-Heat (21), Ref Switch Bit 2 (22)	None (0)
P5.18	PID Negative Limit Enable	Off (0) or On (1)	Off (0)

7.2.6 Menu 6 - IO configuration

Parameter		Range	Default
P6.01	T2 Analog Input 1 Type	0-10 V (0), Digital Input (1) 0-20 mA (2), 4-20 mA No Alarm (3), 4-20 mA Hold (4), 4-20 mA Stop (5), 4-20 mA Error (6)	4-20 mA (2)
P6.02	T4 Analog Input 2 Type		0-10 V (0)
P6.03	T6 Analog Output Type	0-10 V (0), 0-20 mA (1), 4-20 mA (2)	0-10 V (0)
P6.04	T11 Digital IO 1 Type	Digital Input (0), Digital Output (1), Frequency Output (2), PWM Output (3), DO Inverted (4)	Digital Input (0)
P6.05	T15 Digital Input 5 Type	Digital Input (0), Frequency Input (1)	Digital Input (0)
P6.06	T6 Analog Output Function Select	None (0), Ramp Input (1), Ramp Output (2), Output Frequency (3), Output Current (4), Torque Current (5), Output Voltage (6), DC Bus Voltage (7), T2 Analog 1 % (8), T4 Analog 2 % (9), T15 Frequency % (10), Output Power (11), Motor RPM (12), Percentage Load (13), PID Percentage (14), PID Error (15), Motor Thermal % (16), Drive Thermal % (17)	Ramp Output (2)
P6.07	T6 Analog Output Scaling	0.000 to 40.000	1.000
P6.08	T41-T43 Relay Function Select	None (0), Drive Running (1), At Speed (2), At Zero (3), Under Voltage (4), External Error (5), Drive Ready (6), Drive Healthy (7), Current Limit (8), Reverse Running (9),Current Loss (10), Threshold Detect (11)	Drive Healthy (7)
P6.09	T11 Digital Output 1 Function Select		None (0)
P6.10	T11 Frequency/ PWM Output Function Select	None (0), Ramp Input (1), Ramp Output (2), Output Frequency (3), Output Current (4), Torque Current (5), Output Voltage (6), DC Bus Voltage (7), T2 Analog 1 % (8), T4 Analog 2 % (9), T15 Frequency % (10), Output Power (11), Motor RPM (12), Percentage Load (13), PID Percentage (14), PID Error (15), Motor Thermal % (16), Drive Thermal % (17)	None (0)
P6.11	T11 Frequency/PWM Output Scaling	0.000 to 40.000	1.000
P6.12	Negative Logic (NPN Sensor) Select	Off (0) or On (1)	Off (0)
P6.13	Run/Stop Configuration	Custom (0), Enable + Run Forward + Run Reverse (1), Run Forward + Run Reverse (3 Wire) (2), Enable + Run + Reverse (3), Run + Reverse (4), Run + Jog (5), Run Forward + Run Reverse (6), Run + Reverse (7), Keypad (8), Keypad + Enable (9), Keypad Jog (10)	Enable + Run Forward + Run Reverse (1)
P6.14	T2 Analog Input 1 Digital Function Select	None (0), Hardware Enable (1), Run Forward (2), Run Reverse (3), Run Permit (4), Forward Limit Switch (5), Reverse Limit Switch (6), Up/Down % Increase (7), Up/Down % Decrease (8), Up/Down % Reset (9), Ref Switch Bit 0 (10), Ref Switch Bit 1 (11), Ramp Select (12), PID Enable (13), External Error (14), Drive Reset (15), Run (16), Reverse (17), Jog Forward (18), Jog Reverse (19), Fire Mode (20), Motor Pre-Heat (21), Ref Switch Bit 2 (22)	None (0)
P6.15	T4 Analog Input 2 Digital Function Select		None (0)
P6.16	T11 Digital Input 1 Function Select		None (0)
P6.17	T12 Digital Input 2 Function Select		Hardware Enable (1)
P6.18	T13 Digital Input 3 Function Select		Run Forward (2)
P6.19	T14 Digital Input 4 Function Select		Run Reverse (3)
P6.20	T15 Digital Input 5 Function Select		Ref Switch Bit 0 (10)
P6.21	T2 Analog Input 1 Minimum Input	0.00 to 100.00 %	0.00 %
P6.22	T2 Analog Input 1 Percentage at Minimum Input	±100.00 %	0.00 %
P6.23	T2 Analog Input 1 Maximum Input	0.00 to 100.00 %	100.00 %
P6.24	T2 Analog Input 1 Percentage at Maximum Input	±100.00 %	100.00 %
P6.25	T4 Analog Input 2 Minimum Input	0.00 to 100.00 %	0.00 %
P6.26	T4 Analog Input 2 Percentage at Minimum Input	±100.00 %	0.00 %
P6.27	T4 Analog Input 2 Maximum Input	0.00 to 100.00 %	100.00 %
P6.28	T4 Analog Input 2 Percentage at Maximum Input	±100.00 %	100.00 %
P6.29	T15 Frequency Input Minimum Input	0.00 to 100.00 %	0.00 %
P6.30	T15 Frequency Input Percentage at Minimum Input	±100.00 %	0.00 %
P6.31	T15 Frequency Input Maximum Input	0.00 to 100.00 %	100.00 %
P6.32	T15 Frequency Input Percentage at Maximum Input	±100.00 %	100.00 %

7.3 Parameter descriptions

This section provides detailed descriptions on the functions of all parameters within the drive.

7.3.1 Menu 1 - Status & monitoring (Read only)

This menu contains all parameters that show an output variable of the drive for status and monitoring purposes. All parameters in this menu are read-only.

The majority of parameters are numbers that can be easily interpreted on the drive display. For indicator parameters, such as *Alarm Indicators* (**P1.09**), the drive displays an active bit with the 7-segment LEDs as shown in Figure 7-1 where bit 3 is active (1).

Figure 7-1 Binary parameter display

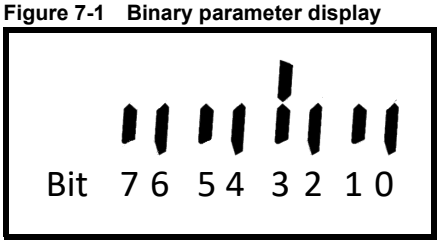

P1.01	**Output Frequency**		
Range:	± *Maximum Frequency Limit* (**P2.02**) Hz	Default:	Read Only

Displays the drive output frequency in Hz. This is the sum of the *Ramp Output* (**P1.14**) and motor slip compensation. A positive value is used for forward rotation, a negative value is used for reverse rotation.

NOTE

The range stated above applies for when the Output Frequency is used as an input or output such as when represented on T6 Analog Output. The parameter may extend outside of this range if slip compensation hasn't been disabled or if the motor is being driven by another part of the machine faster than the maximum frequency limit.

P1.02	**Output Voltage**		
Range:	0 to Maximum Supply Voltage V (100 V & 200 V Drive = 240 V, 400 V Drive = 480 V)	Default:	Read Only

Displays the r.m.s. line to line voltage at the motor terminals of the drive. (U to V; V to W; W to U.)

NOTE

The range stated above applies for when the Output Voltage is used as an input or output such as when represented on T6 Analog Output. The parameter may extend outside of this range if the drive is decelerating with high motor voltage enabled.

P1.03	**Output Power**		
Range:	0 to Drive Rated Power x 2.2 kW	Default:	Read Only

Displays the power flowing through the motor terminals of the drive. This parameter should be used for indication purposes only. A positive value indicates power flowing from the drive to the motor.

P1.04	**Motor RPM**		
Range:	± 18000 rpm	Default:	Read Only

Displays the motor RPM. The *Ramp Output* (**P1.14**) is converted to the equivalent RPM using the number of motor poles. The actual motor RPM could be lower if *Motor Rated Speed* (**P3.02**) is not set correctly.

P1.05	**Drive State**		
Range:	0 to 17	Default:	Read Only

Displays the present state of the drive as described below:

Value	***Drive State***	***Description***
0	Inhibited	The drive is not enabled
1	Ready	The drive is enabled but has not received a run signal
4	Running	The drive is running
5	Supply Loss	Supply loss has been detected
6	Deceleration	The drive is stopping the motor with a decelerating ramp
7	Injecting D.C	The drive is injecting D.C. braking current into the motor
9	Error	The drive in an error state, check the error log for more information
15	Under Voltage	The drive is in the under-voltage state
17	Initialising	The drive systems are initialising

P1.06	**Output Current**		
Range:	± Drive Rated Current x 2.2 A	Default:	Read Only

This displays the total output current to the motor. This is made up of two components, motor magnetising current and motor *Torque Producing Current* (**P1.07**).

P1.07	**Torque Producing Current**		
Range:	± Drive Rated Current x 2.2 A	Default:	Read Only

This parameter displays the component of the *Output Current* (**P1.06**) that is in phase with the voltage and does not include the magnetising current of the motor.
This torque includes the load torque and acceleration torque.
If the Output Frequency is positive (forward rotation), a positive value of Torque Producing Current would hold the motor load or cause the motor to accelerate.
If the Output Frequency is negative (reverse rotation), a negative value of torque producing current would hold the motor load or cause the motor to accelerate.
The value is proportional to the torque produced by the motor provided the frequency applied to the motor is at or below the motor rated frequency.

P1.08	**Percentage Load**		
Range:	± Torque Current Maximum Limit %	Default:	Read Only

This indicates the load on the motor as a percentage of the motor rated torque.
For forward rotation, this value is positive for a motoring load and negative for a regenerating load. For reverse rotation this value is negative for a motoring load and positive for a regenerating load.
Percentage Load (**P1.08**) = *Torque Producing Current* (**P1.07**) / I_{Trated} x 100
I_{Trated} = Rated Torque Current = *Motor Rated Current (***P3.01***) x Motor Rated Power Factor (***P3.04***)*

P1.09	**Alarm Indicators**		
Range:	$0_7 0_6 0_5 0_4 0_3 0_2 0_1 0_0$ to $1_7 1_6 1_5 1_4 1_3 1_2 1_1 1_0$	Default:	Read Only

An alarm is used by the drive to give an early warning of a problem which could lead to a drive error. The display will indicate an alarm condition by flashing the display alarm indicators shown below. By default, in some alarm conditions, the drive may take action to prevent an error for example reducing the motor current or speed.

Bit	**Display Alarm Indicator**	**Alarm**	**How to remove the alarm**
Bit 0	A.0	Motor Overload	Reduce the load on the motor
Bit 1	A.1	Drive Overload	Reduce the load on the motor or ambient temperature of the drive
Bit 2	A.2	Auto-tune Active	Will be reset when Autotune complete
Bit 3	A.3	Limit Switch	Rotate the motor away from the limit switch
Bit 4	A.4	Supply Imbalance	Check supply fuses to the drive
Bit 5	A.5	Analog Current	Check current loop master is powered and the integrity of the wiring is good
Bit 6	A.6	Current Limit	Reduce the load on the motor
Bit 7	A.7	I/O Overload	Check the 24 V output, digital output, and 485 port for an overload condition

Find additional information in Marshal or in section 9.1 *Alarms*.

P1.10	**Drive Status Indicators**		
Range:	$0_7 0_6 0_5 0_4 0_3 0_2 0_1 0_0$ to $1_7 1_6 1_5 1_4 1_3 1_2 1_1 1_0$	Default:	Read Only

Displays a set of drive status indicators.

Bit	**Status**	**Description**
Bit 0	Supply Loss	Indicates supply loss has been detected. The behaviour in this situation is controlled by *Supply Loss Action* (**P4.08**).
Bit 1	Limit Switch Active	Indicates at least one limit switch is active.
Bit 2	Thermal Limit Active	Indicates the output current is being limited further than that defined by *Torque Current Limit* (**P3.17**) for thermal protection of the motor.
Bit 3	Current Limit Active	Indicates the output current is being limited by the current limit defined by *Torque Current Limit* (**P3.17**) or Bit 2 above.
Bit 4	Drive Active	Indicates the drive is applying voltage to the motor.
Bit 5	Healthy	Indicates the drive is healthy and there are no errors.
Bit 6	At Speed ± 1 Hz	Indicates the *Ramp Output* (**P1.14**) is within 1 Hz of the Ramp Input.
Bit 7	At Zero ± 2 Hz	Indicates the *Ramp Output* (**P1.14**) is within 2 Hz of 0 Hz.

P1.11 Sequencer Input and Output Indicators

Range:	$0_7 0_6 0_5 0_4 0_3 0_2 0_1 0_0$ to $1_7 1_6 1_5 1_4 1_3 1_2 1_1 1_0$	Default:	Read Only

Displays the input and output states of the sequencer. The drive sequencer monitors inputs to control how the drive will run.

Bit	Status	Description
Bit 0	Hardware Enable	Set to 1 if a digital input has been configured as the Hardware Enable function (1) and is active, or if no digital input has been configured as a Hardware Enable.
Bit 1	Software Enable	If the *Binary Control Word* (**P4.18**) is enabled this is set to 1 when the enable bit of the control word is set otherwise this is set to 1 if *Drive Enable* (**P4.17**) is set to true.
Bit 2	Limit Switch Forward	Set to 1 if a digital input has been configured as the *Forward Limit Switch* (5) and is active. If set to 1 the drive can only run the motor in reverse.
Bit 3	Limit Switch Reverse	Set to 1 if a digital input has been configured as the *Reverse Limit Switch* (6) and is active. If set to 1 the drive can only run the motor forward.
Bit 4	Run	Set to 1 when a run signal is detected.
Bit 5	Reverse	Set to 1 when a Reverse signal is detected to reverse the selected reference.
Bit 6	Jog	Set to 1 by the sequencer to select the Jog reference when a Jog signal is detected.
Bit 7	Under Voltage	Set to 1 by the sequencer if the drive is in an under voltage state.

P1.12 Run & Direction Indicators

Range:	$0_7 0_6 0_5 0_4 0_3 0_2 0_1 0_0$ to $1_7 1_6 1_5 1_4 1_3 1_2 1_1 1_0$	Default:	Read Only

Displays the states of the drive control inputs.

Bit	Status	Description
Bit 0	Run Forward	Set to 1 if a *Run Forward* signal is active
Bit 1	Run Reverse	Set to 1 if a *Run Reverse* signal is active.
Bit 2	Run	Set to 1 if a *Run* signal is active.
Bit 3	Reverse	Set to 1 if a *Reverse* signal is active.
Bit 4	Jog Forward	Set to 1 if a *Jog Forward* signal is active.
Bit 5	Jog Reverse	Set to 1 if a *Jog Reverse* signal is active.
Bit 6	Run Permit (Not Stop)	Set to 1 if a *Run Permit (Not Stop)* signal is active.
Bit 7	Fire Mode Active	Set to 1 if a *Fire Mode* signal is active.

The indicators that are shown here can be set by any of the control terminals using their function selector parameters such as *T11 Digital Input 1 Function Select* (**P6.16**) or by the control word.

P1.13 Ramp Input

Range:	± *Maximum Frequency Limit* (**P2.02**) Hz	Default:	Read Only

Displays the selected reference frequency after the skip band and frequency limits have been applied but before it is fed into the ramp system. See section 7.3.2 *Menu 2 - References & Ramps*.

P1.14 Ramp Output

Range:	± *Maximum Frequency Limit* (**P2.02**) Hz	Default:	Read Only

Displays the frequency output from the ramp system.

NOTE

The range stated above applies for when the Ramp Output is used as an input or output such as when represented on T6 Analog Output. The parameter may extend outside of this range if the motor is being driven by another part of the machine faster than the maximum frequency limit.

P1.15 T2 Analog Input 1 Percentage
P1.16 T4 Analog Input 2 Percentage
P1.17 T15 Frequency Input Percentage

Range:	± 100.00 %	Default:	Read Only

Displays the level of analog input 1, analog input 2 and the frequency input as a percentage after it has been scaled according to the terminal's scaling parameters. See *T2 Analog Input 1 Minimum Input* (**P6.21**).
These values can be used for speed control by selecting an appropriate configuration in *Frequency Reference Configuration* (**P2.03**) or by selecting the function in *Frequency Reference 1 Selector* (**P2.21**) to *Frequency Reference 4 Selector* (**P2.24**). When selected for speed control, 100 % is the *Maximum Frequency Limit* (**P2.02**).

P1.18	**Up/Down Percentage**		
Range:	0.0 to 100.0 %	Default:	Read Only

Displays the value of the Up/Down reference as a percentage which can be increased or decreased by the keypad or drive terminals. This parameter is unidirectional with motor direction set by the configured run forward or run reverse commands, see *Run/Stop Configuration* (**P6.13**).

The value can be used for speed control by selecting Keypad (5) or Terminal Up/Down (6) in *Frequency Reference Configuration* (**P2.03**) or in to *Frequency Reference 1 Selector* (**P2.21**) to *Frequency Reference 4 Selector* (**P2.24**). When selected for speed control, 100 % is the *Maximum Frequency Limit* (**P2.02**).

See *Up/Down Percent Configuration* (**P2.14**) and *Up/Down Percentage Time to Max* (**P2.15**) for information on Up/Down control configuration.

When controlled by the drive terminals this feature is sometimes referred to as a Motorized Potentiometer.

P1.19	**PID Output Percentage**		
Range:	± 100.00 %	Default:	Read Only

Displays the percentage output for the PID controller. This includes the feed forward term selected by *PID Feed Forward Selector* (**P5.05**).

The value can be used for speed control by selecting a PID configuration in *Frequency Reference Configuration* (**P2.03**) or in *Frequency Reference 1 Selector* (**P2.21**) to *Frequency Reference 4 Selector* (**P2.24**). When selected for speed control, 100 % is the *Maximum Frequency Limit* (**P2.02**).

P1.20	**PID Status Indicators**		
Range:	$0_2 0_1 0_0$ to $1_2 1_1 1_0$	Default:	Read Only

Displays a set of indicators that represent the status of the PID and threshold detector.

Bit	Indicator	Description
Bit 0	PID Enabled	Indicates the PID is enabled and active.
Bit 1	PID Limit Applied	Indicates that the PID output is being limited by *PID Output Lower Limit* (**P5.09**) or *PID Output Upper Limit* (**P5.10**), or a limit following the addition of the Feed Forward is being applied.
Bit 2	Threshold Detector Output	Indicates that the threshold detector output is active.

If a function has been selected in *PID Enable Selector* (**P5.11**) it must be active to enable the PID controller. If an input has been configured as the *PID Hardware Enable* (13), this must also be active to enable the PID controller.

P1.21	**PID Error**		
Range:	± 100.00 %	Default:	Read Only

Displays the PID Error. This is the difference between the PID reference and PID feedback which are selected by *PID Reference Selector* (**P5.03**) and *PID Feedback Selector* (**P5.04**).

P1.22	**Motor Thermal Percentage**		
Range:	0 to 100 %	Default:	Read Only

Displays an estimate of the motor temperature as a percentage of the maximum allowed temperature for the motor. This estimation allows a longer overload period when the motor is cool and reduces the allowable period as the motor reaches its maximum temperature. The period depends on the output current and the estimated motor starting temperature.

The action taken by the drive can be set in *Thermal Protection Action* (**P3.21**).

If *Thermal Protection Action* (**P3.21**) is set to Limit, the output current will be limited if this parameter reaches 100 %, and the limit will then be removed once this parameter drops below 95 %.

If *Thermal Protection Action* (**P3.21**) is set to Error, the error will occur when this parameter reaches 100 %.

An alarm is indicated if this percentage is larger than 75 % and the current magnitude is such that it is still increasing, see *Alarm Indicators* (**P1.09**).

P1.23	**Drive Thermal Percentage**		
Range:	0 to 100 %	Default:	Read Only

Displays the internal temperature of the drive which will change depending on the output current. This is displayed as a percentage of the maximum allowed drive temperature.

The action taken by the drive can be set in *Thermal Protection Action* (**P3.21**).

If *Thermal Protection Action* (**P3.21**) is set to Limit, the output current will be limited if this parameter > 90 %.

If *Thermal Protection Action* (**P3.21**) is set to Error, the error will occur when this parameter = 100 %.

An alarm is indicated if this percentage is > 95 % and cleared when < 75 %, see *Alarm Indicators* (**P1.09**).

P1.24	**DC Bus Voltage**		
Range:	0 to Maximum D.C. Bus Voltage V	Default:	Read Only

Displays the voltage on the D.C. Bus of the drive.

This voltage must exceed the under-voltage (UV) level for the drive to run.

Drive Rated Voltage	Under Voltage Level	Maximum D.C. Bus Voltage
100 V	175 V	415 V
200 V	175 V	415 V
400 V	330 V	830 V

P1.25	**Digital IO Indicators**		
Range:	$0_7 0_6 0_5 0_4 0_3 0_2 0_1 0_0$ to $1_7 1_6 1_5 1_4 1_3 1_2 1_1 1_0$	Default:	Read Only

Displays a set of indicators that represent the status of all the digital inputs and outputs as well as the digital status of the analog inputs.

Bit	Input/Output	Description
Bit 0	T11 Digital IO 1	Set to 1 if the input or output is active
Bit 1	T12 Digital Input 2	Set to 1 if the input is active
Bit 2	T13 Digital Input 3	Set to 1 if the input is active
Bit 3	T14 Digital Input 4	Set to 1 if the input is active
Bit 4	T15 Digital Input 5	Set to 1 if the input is active when *T15 Digital Input 5 Type* (**P6.05**) = 0 (Digital Input)
Bit 5	T2 Analog Input 1	Set to 1 if the input is active when *T2 Analog Input 1 Type* (**P6.01**) = 1 (Digital)
Bit 6	T4 Analog Input 2	Set to 1 if the input is active when *T4 Analog Input 2 Type* (**P6.02**) = 1 (Digital)
Bit 7	T41 Relay	Set to 1 if the relay is active

P1.26	**Parameter 1 Saved Value on Error**		
P1.27	**Parameter 2 Saved Value on Error**		
P1.28	**Parameter 3 Saved Value on Error**		
Range:	Dependent on Parameter Saved	Default:	Read Only

If an error occurs the drive will save the value of the parameter selected by *Parameter 1 Save on Error Selector* (**P4.09**), *Parameter 2 Save on Error Selector* (**P4.10**), and *Parameter 3 Save on Error Selector* (**P4.11**).

All of these parameters are saved at the point when *Error* (**P1.29**) occurs.

P1.29	**Error**		
P1.30	**Error History 1**		
P1.31	**Error History 2**		
P1.32	**Error History 3**		
Range:	0 to 255	Default:	

Displays the most recent error (including an active error). Previous errors are listed with Error History 1 being more recent than Error History 3.

P1.33 Drive Diagnostics

Range:	0 to 17	Default:	Read Only

This is a diagnostic parameter that helps identify the next action needed for the drive to run.

Value	Name	Description
0	Running	Drive is running i.e. No Diagnostic information.
1	Inhibited	Drive is not enabled. See *Sequencer Input and Output Indicators* (**P1.11**)
2	Ready	Drive is enabled but has not received a Run signal. See *Run and Direction Indicators* (**P1.12**)
3	Locked Inhibit	Drive has stopped and is waiting for the run signal to be removed before it can be made to run again (such as after an Auto-tune has finished or following a supply loss).
4	Ref 1 Setup	The selected reference is set to None (0). See *Frequency Reference 1 to 4 Switch* (**P2.21**).
5	Ref 2 Setup	
6	Ref 3 Setup	
7	Ref 4 Setup	
8	Up/Down Ref	The Up/Down Reference has been selected, but not configured. See *Up/Down Percent Configuration* (**P2.14**)
9	Freq Ref	The Frequency Reference has been selected, but has not been configured. See *T15 Digital Input 5 Type* (**P6.05**).
10	PID Enable	PID Percent has been selected, but the PID has not been enabled. See *PID Enable Selector* (**P5.11**)
11	PID Ref	PID Percent has been selected, but the PID Reference has not been configured. See *PID Reference Selector* (**P5.03**)
12	PID Fbk	PID Percent has been selected, but the PID Feedback has not been configured. See *PID Feedback Selector* (**P5.04**)
13	PID Up/Down Ref	PID Percent has been selected and the PID Reference is set to Up/Down, but the Up/Down Reference has not been configured. See *Up/Down Percent Configuration* (**P2.14**).
14	PID Freq Ref	PID Percent has been selected and the PID Reference is set to Frequency input, but the Frequency input has not been configured. See *T15 Digital Input 5 Type* (**P6.05**).
15	PID Freq Fbk	PID Percent has been selected and the PID feedback is set to Frequency input, but the Frequency input has not been configured, see *T15 Digital Input 5 Type* (**P6.05**).
16	Current Loop Loss	Drive has stopped because the current loop has been lost on one of the analog inputs, see *Alarm Indicators* (**P1.09**).
17	Drive State	The drive is not running because it is currently in Supply Loss, Injecting D.C., Error, Under Voltage or it is still initialising, see *Drive State* (**P1.05**).

P1.34 Energy Usage

Range:	-320.00 to 320.00	Default:	

The energy usage through the drive is accumulated and displayed here in kilowatt-hours. A positive value represents a net transfer of energy from the drive to the motor. To reset the energy usage set *Reset Energy Usage* (**P4.22**) to 1. When the counter reaches its limit, the value is clamped and does not roll over. This value is saved automatically at power-down.

7.3.2 Menu 2 - Reference & ramps

This menu groups together parameters used for speed control and configures how the drive accelerates and decelerates to the chosen reference by the ramp system. Four frequency references can be configured, and the user can switch between these using digital inputs or via communications to provide the drive with a final frequency reference. *Frequency Reference Configuration* (**P0.05**) can be used to automatically configure the multiple references and the required control terminal functions. Alternatively, select between the ten possible reference inputs using the parameters *Frequency Reference 1 Selector* (**P2.21**) to *Frequency Reference 4 Selector* (**P2.24**).

Figure 7-2 Menu 2 - Reference & ramps

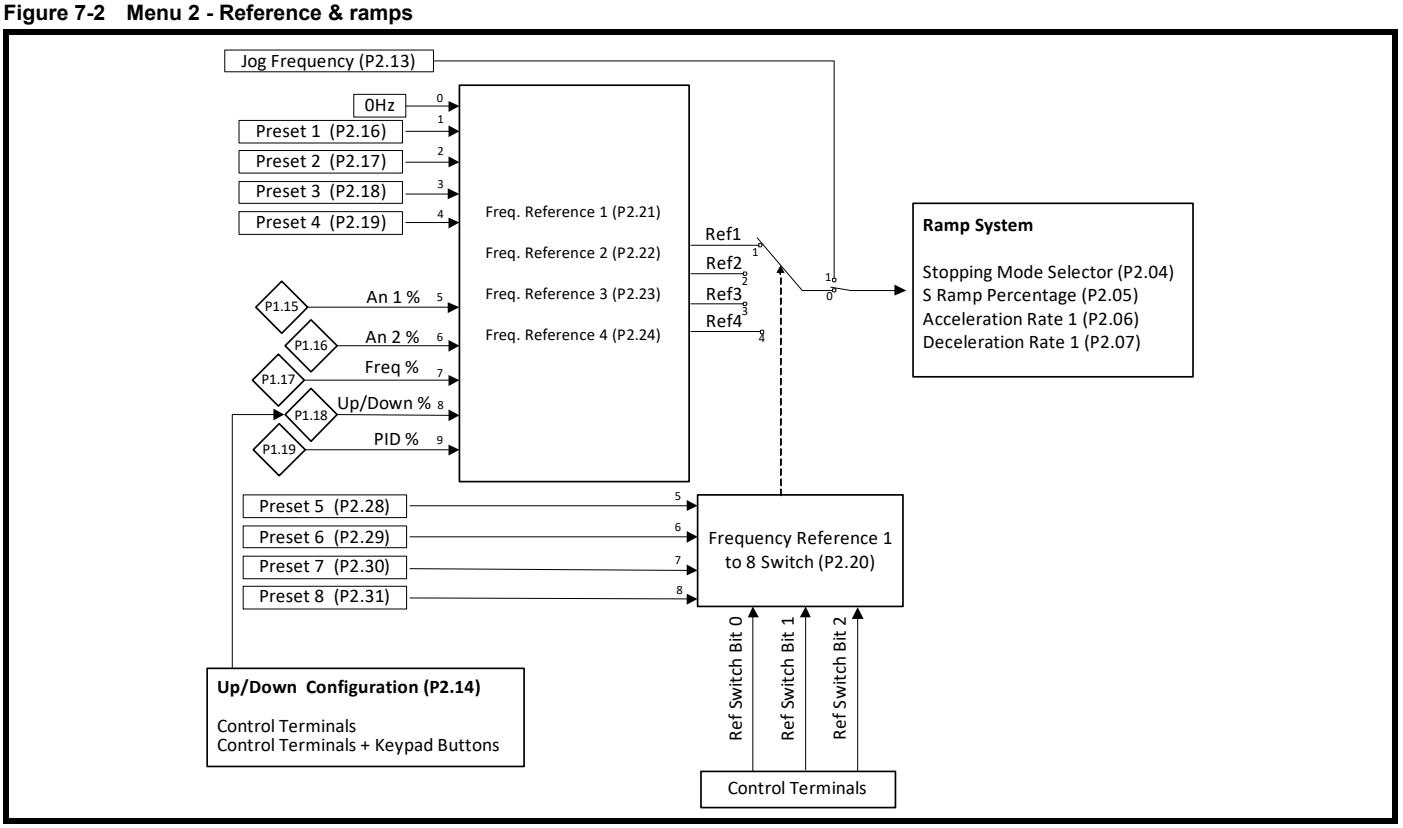

Reference Switch Bit 0, Reference Switch Bit 1 and *Reference Switch Bit 2* can be selected as functions of the drive control terminals and use a binary system to switch between references as Table 7-1 describes.

Table 7-1 Frequency reference switch

Reference Switch Bit 2	Reference Switch Bit 1	Reference Switch Bit 0	Reference Selected
0	0	0	Frequency Reference 1
0	0	1	Frequency Reference 2
0	1	0	Frequency Reference 3
0	1	1	Frequency Reference 4
1	0	0	Preset 5
1	0	1	Preset 6
1	1	0	Preset 7
1	1	1	Preset 8

Alternatively, Frequency *Reference 1 to 8 Switch* (**P2.20**) can be used to select individual references.

P2.01	**Minimum Frequency Limit**		
Range:	0.0 to 300.0 Hz	Default:	0.0 Hz
Sets the minimum limit applied to the selected reference. If the value set is higher than the *Maximum Frequency Limit* (**P2.02**) the reference will be limited to the maximum. This limit is used for both directions of rotation.			
P2.02	**Maximum Frequency Limit**		
Range:	0.0 to 300.0 Hz	Default:	Region Dependent
Sets the maximum limit applied to the selected reference. Generally, the motor rated frequency is used as the maximum frequency limit. This is a symmetrical limit for both directions of rotation. This is used for scaling the range of percentage inputs. Default for 50 Hz regions = 50.0 Hz Default for 60 Hz regions = 60.0 Hz. **NOTE** *Output Frequency* (**P1.01**) can be higher than this limit due to motor slip compensation.			

P2.03 Frequency Reference Configuration

Range:	0 to 9	Default:	1 (Local/Remote)

Used to automatically set a group of parameters for common configurations as outlined below:

Value	Configuration	Description
0	Custom	The parameters in the table below have been changed from a standard reference configuration.
1	Local/Remote	A current input on analog input 1 and a voltage input on analog input 2. digital input 5 is used to select between them.
2	Voltage/Preset Input	A voltage input on analog input 1. Digital input 5 and digital input 1 are used as binary switches to choose between it and preset frequency references 2, 3, and 4.
3	Current/Preset Input	A current input on analog input 1. Digital input 5 and digital input 1 are used as binary switches to choose between it and preset frequency references 2, 3, and 4.
4	Presets	Digital input 5 and digital input 1 are used as the binary switches to choose between the four preset frequency references.
5	Keypad	The keypad buttons are used to control the frequency *Up/Down Percentage* (**P1.18**).
6	Terminal Up/Down	Digital input 5 and digital input 1 are used to control the *Up/Down Percentage* (**P1.18**).
7	Frequency Input	A frequency input on digital input 5.
8	PID Voltage Ref.	A Voltage input on analog input 1 as the reference, and a current input on analog input 2 as the feedback. The PID output is used as the drive reference.
9	PID + Feed Forward	A Voltage input on T2 analog input 1 as the Feed Forward, and a current input on T4 analog input 2 as the feedback, the PID reference is set by PID Fixed Reference Setpoint 1. The PID output is used as the drive reference.

The table above shows the options to quickly set up the reference system for a specific application. The assignments are made on exit of the parameter (Press settings button or back in Marshal).

For more detailed information and wiring diagrams refer to ***section 6.2 Controlling the motor speed.***

The table below indicates the parameters that are set up and the values written.

Parameter	Frequency Reference Configuration (P2.03)									
	0	**1**	**2**	**3**	**4**	**5**	**6**	**7**	**8**	**9**
Up/Down Percent Configuration (**P2.14**)	-	-	-	-	-	3	0	-	-	-
Frequency Reference 1 to 4 Switch (**P2.20**)	-	0	0	0	0	1	1	1	1	1
Frequency Reference 1 Selector (**P2.21**)	-	5	5	5	1	8	8	7	9	9
Frequency Reference 2 Selector (**P2.22**)	-	6	2	2	2	-	-	-	-	-
Frequency Reference 3 Selector (**P2.23**)	-	-	3	3	3	-	-	-	-	-
Frequency Reference 4 Selector (**P2.24**)	-	-	4	4	4	-	-	-	-	-
PID Reference Selector (**P5.03**)	-	-	-	-	-	-	-	-	1	5
PID Feedback Selector (**P5.04**)	-	-	-	-	-	-	-	-	2	2
PID Feed Forward Selector (**P5.05**)	-	-	-	-	-	-	-	-	0	1
PID Enable Selector (**P5.11**)	-	-	-	-	-	-	-	-	1	1
T2 Analog Input 1 Type (**P6.01**)	-	3	0	3	-	-	-	-	0	0
T4 Analog Input 2 Type (**P6.02**)	-	0	-	-	-	-	-	-	6	6
T11 Digital IO 1 Type (**P6.04**)	-	-	0	0	0	-	0	-	-	-
T15 Digital Input 5 Type (**P6.05**)	-	0	0	0	0	-	0	1	-	-
T11 Digital Input 1 Function Select (**P6.16**)	-	-	11	11	11	-	8	-	-	-
T15 Digital Input 5 Function Select (**P6.20**)	-	10	10	10	10	-	7	-	-	-

"-" indicates that the configuration will not change the setting of the parameter from the current value.

P2.04	**Stopping Mode Selector**		
Range:	0 to 5	Default:	1 (Ramp)

Defines how the motor is controlled when the run signal is removed from the drive.

Value	Stopping Mode	Description
0	Coast	Remove power from the motor and allow to spin under control of the load. The drive waits for 1 second before it can be restarted.
1	Ramp	Motor slows down to 0 Hz under control of the drive.
2	Ramp & DC Brake	Ramp stop to 0 Hz followed by DC injection at a level defined by *DC Braking Current Level* (**P3.13**) for a time defined by *DC Braking Time* (**P3.14**). This can prevent the motor from moving after the deceleration.
3	DC Brake, 0 Hz detect	Low frequency current injection with detection of low speed and then DC injection at a level defined by *DC Braking Current Level* (**P3.13**) for a time defined by *DC Braking Time* (**P3.14**). The drive waits for 1 second before it can be restarted.
4	Timed DC Brake	DC injected at a level defined by *DC Braking Current Level* (**P3.13**) for a time defined by *DC Braking Time* (**P3.14**). The drive waits for 1 second before it can be restarted.
5	Distance	Stops in the same distance from any speed as it would at the specified deceleration rate from the maximum frequency. See figure 7-2 below. Distance stop will not function if S-ramp has been enabled (**P2.05** > 0)

Distance Stop Example:

Figure 7-3 Distance Stop

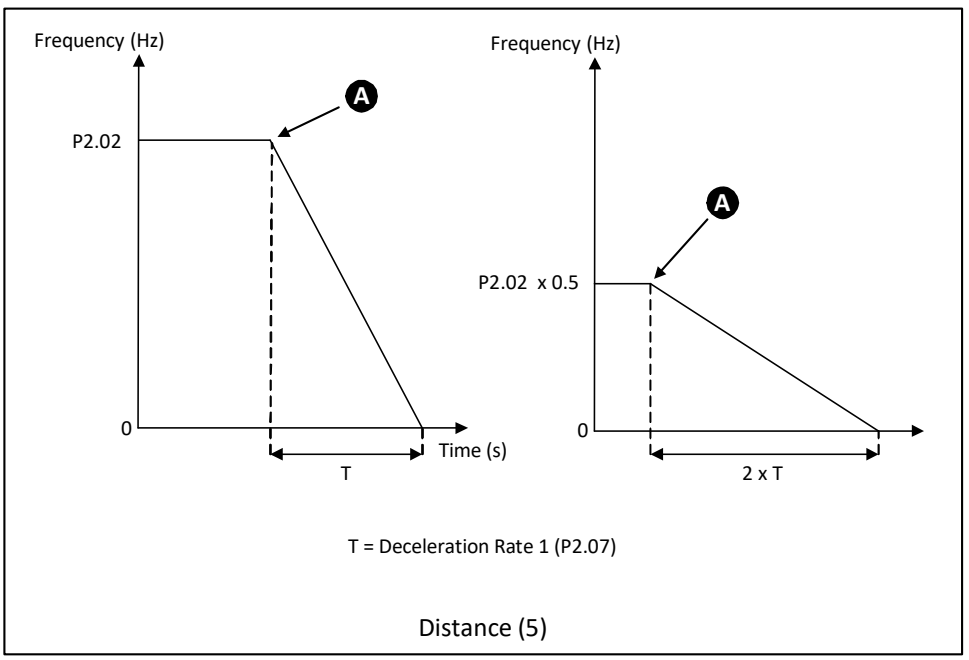

A is the point that the 'Run' signal is removed.

P2.05	**S-Ramp Percentage**		
Range:	0.00 to 50.0 %	Default:	0.0

An S-ramp allows for a smooth change in acceleration. To enable S-ramps, set this parameter to specify the percentage of the ramp time to include an S-ramp profile.

If the S-ramp has been enabled and *Stopping Mode Selector* (**P2.04**) = Distance (5), the distance stop function will be disabled and the drive will ramp to stop with the S-ramp enabled

It should be noted that as this parameter is increased, the time to ramp to maximum frequency does not change, instead the maximum acceleration rate in the centre of the profile increases which causes a steeper linear portion at the centre of the profile.

Figure 7-4 S-Ramp set-up

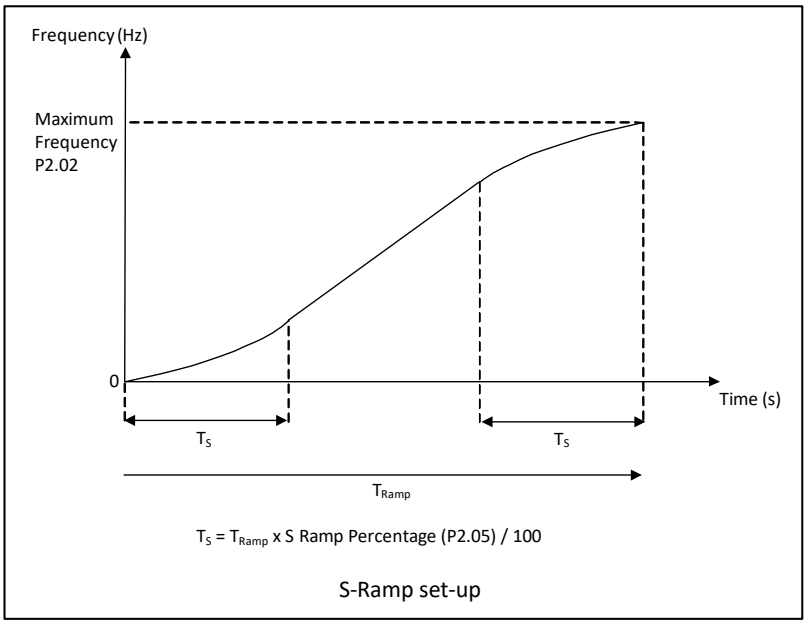

P2.06	**Acceleration Rate 1**		
Range:	0.1 to 1999.9 s	Default:	5.0

Defines the acceleration time from 0 Hz to the *Maximum Frequency Limit* (**P2.02**). An acceleration rate applies when the frequency is changing away from 0 Hz.

P2.07	**Deceleration Rate 1**		
Range:	0.1 to 1999.9 s	Default:	10.0

Defines the deceleration time from the maximum frequency limit to 0 Hz. A deceleration rate applies when the frequency is changing towards 0 Hz.

The drive may increase the ramp time due to the D.C. bus voltage controller, see *Deceleration Ramp Type* (**P2.11**).

P2.08	**Acceleration Rate 2**		
Range:	0.1 to 1999.9 s	Default:	5.0

See *Acceleration Rate 1* (**P2.06**).

P2.09	**Deceleration Rate 2**		
Range:	0.1 to 1999.9 s	Default:	10.0

See *Deceleration Rate 1* (**P2.07**).

P2.10	**Ramp Rate Selector**		
Range:	0 to 2	Default:	0

Selects between ramp rates 1 or 2.

Value	Description
0	The digital input function *Ramp Select* (12) is used to select between acceleration / deceleration rates 1 and 2, for more information see Menu 6 *IO Configuration*. This function can be selected for any of the digital inputs. If the digital input is inactive or if the function has not been configured, *Acceleration Rate 1* (**P2.06**) and *Deceleration Rate 1* (**P2.07**) are used by the ramp system.
1	*Acceleration Rate 1* (**P2.06**) and *Deceleration Rate 1* (**P2.07**) are used by the ramp system.
2	*Acceleration Rate 2* (**P2.08**) and *Deceleration Rate 2* (**P2.09**) are used by the ramp system.

P2.11 Deceleration Ramp Type

Range:	0 to 2	Default:	1 (Standard Ramp)

Defines the ramp type used for decelerating, three types are available.

Value	Text	Description
0	Fast	The drive will always try to achieve the specified deceleration rate but if set too fast, may result in an over voltage error.
1	Standard Ramp	Drive aims to achieve the deceleration rate but will increase the deceleration time to prevent a D.C. over voltage error.
2	Ramp + Motor Loss	Faster deceleration that is controlled to prevent a change to D.C. over voltage error, with increased losses in the motor.

The *Ramp + Motor Loss* (2) increases the voltage applied to the motor to increase the losses in the motor and thus reduce the deceleration time that can be achieved. Note that with applications requiring a lot of deceleration cycles this could overheat the motor.

P2.12 Standard Ramp Voltage

Range:	0 to Maximum D.C. Bus Voltage	Default:	Rating Dependent

The drive will attempt to hold this voltage during deceleration if *Deceleration Ramp Type* (**P2.11**) = 1 or 2 (Standard Ramp Modes). If the application is such that occasional DC Over Voltage errors (E001) are seen during deceleration, reducing this parameter can prevent the error from occurring if the maximum supply voltage allows this

Note that this parameter should not be set lower than the change to the maximum supply voltage x √2.

Drive Voltage Rating	Region	Maximum D.C. Bus Voltage	Parameter Default
100 & 200 V	All	415 V	375 V
400 V	50 Hz	830 V	750 V
400 V	60 Hz	830 V	775 V

P2.13 Jog Frequency

Range:	± *Maximum Frequency Limit* (**P2.02**)	Default:	1.5 Hz

The drive will run at this frequency when it receives a jog signal from the keypad buttons, control terminals or control word.

A jog signal is overridden by a run signal.

P2.14 Up/Down Percent Configuration

Range:	0 to 5	Default:	0 (Terminal - Reset)

Used to define the value of the Up/Down Percentage at power up and to enable/disable the use of the Up/Down buttons on the keypad to set the Up/Down Percentage.

If configured with the digital input functions Up/Down % Increase (7) and Up/Down % Decrease (8), the control terminals can be used to adjust the *Up/Down Percentage* (**P1.18**). If modes 3, 4 and 5 are selected, both the control terminals and the keypad Up and Down buttons can be used to set the *Up/Down Percentage* (**P1.18**).

Value	Text	Mode	Description
0	Terminals Only 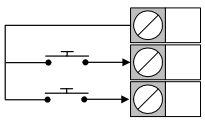	Reset	Up/Down Percentage set to 0 at power up.
1		Last	Up/Down Percentage saved and restored at power up.
2		Preset 1	Up/Down Percentage set to *Preset Reference 1* (**P2.16**) * at power up.
3	Terminals and Keypad	Keypad and Reset	Keypad control enabled and Up/Down Percentage set to 0 at power up.
4		Keypad and Last	Keypad control enabled and Up/Down Percentage saved and restored at power up.
5		Keypad and Preset 1	Keypad control enabled and Up/Down Percentage set to *Preset Reference 1* (**P2.16**) * at power up.

*Up/Down Percentage is set to Preset Frequency 1 as a percentage of the *Maximum Frequency Limit* (**P2.02**).

This parameter can be set by *Frequency Reference Configuration* (**P2.03**).

P2.15 Up/Down Percentage Time to Max

Range:	0 to 250 s	Default:	20 s

The rate of change of *Up/Down Percentage* (**P1.18**) is defined by this parameter which is the number of seconds to change from 0 % to 100 %.

This rate is applied when holding the Up or Down buttons and the terminal control. Single presses will change the value by 0.1 %.

P2.16	**Preset Frequency 1**		
Range:	± *Maximum Frequency Limit* (**P2.02**)	Default:	5.0 Hz
Used to provide a fixed frequency reference.			

P2.17	**Preset Frequency 2**		
Range:	± *Maximum Frequency Limit* (**P2.02**)	Default:	10.0 Hz
Used to provide a fixed frequency reference.			

P2.18	**Preset Frequency 3**		
Range:	± *Maximum Frequency Limit* (**P2.02**)	Default:	25.0 Hz
Used to provide a fixed frequency reference.			

P2.19	**Preset Frequency 4**		
Range:	± *Maximum Frequency Limit* (**P2.02**)	Default:	50.0 Hz
Used to provide a fixed frequency reference.			

P2.20	**Frequency Reference 1 to 8 Switch**		
Range:	0 to 8	Default:	0 (Binary)

Used to select one of eight references that can be used by the drive.

Value	Reference Switch	Description
0	Binary	Digital input functions can be configured to select reference 1 - 8 using digital inputs
1	Reference 1	The reference configured in *Frequency Reference 1 Selector* (**P2.21**) will be used.
2	Reference 2	The reference configured in *Frequency Reference 2 Selector* (**P2.22**) will be used.
3	Reference 3	The reference configured in *Frequency Reference 3 Selector* (**P2.23**) will be used.
4	Reference 4	The reference configured in *Frequency Reference 4 Selector* (**P2.24**) will be used.
5	Preset 5	The frequency reference is defined by *Preset Frequency 5* (**P2.28**)
6	Preset 6	The frequency reference is defined by *Preset Frequency 6* (**P2.29**)
7	Preset 7	The frequency reference is defined by *Preset Frequency 7* (**P2.30**)
8	Preset 8	The frequency reference is defined by *Preset Frequency 8* (**P2.31**)

If this parameter is set to 0, any digital input can be configured to select a reference by setting their input function to *Frequency Switch bit 0*, *Frequency Switch bit 1* or *Ref Switch Bit 2*, as per the diagram below where 1 = an active signal and 0 = no signal.

Figure 7-5 Frequency reference switch

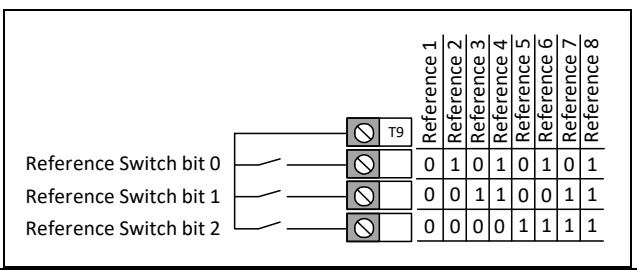

P2.21	**Frequency Reference 1 Selector**		
Range:	0 to 10	Default:	6 (T2 Analog 1 %)

P2.22	**Frequency Reference 2 Selector**		
Range:	0 to 10	Default:	7 (T4 Analog 2 %)

P2.23	**Frequency Reference 3 Selector**		
Range:	0 to 10	Default:	0 (None)

P2.24	**Frequency Reference 4 Selector**		
Range:	0 to 10	Default:	0 (None)

These four parameters can be used to configure four individual references that the drive can use for speed control. For information on selecting between these references see *Frequency Reference 1 to 8 Switch* (**P2.20**).

Value	Frequency Reference	Description
0	None	A fixed reference of 0 Hz
1	Preset 1	The frequency reference is defined by *Preset Frequency 1* (**P2.16**)
2	Preset 2	The frequency reference is defined by *Preset Frequency 2* (**P2.17**)
3	Preset 3	The frequency reference is defined by *Preset Frequency 3* (**P2.18**)
4	Preset 4	The frequency reference is defined by *Preset Frequency 4* (**P2.19**)
5	T2 Analog 1 %	The frequency reference is derived from *T2 Analog Percentage 1* (**P1.15**)
6	T4 Analog 2 %	The frequency reference is derived from *T4 Analog Percentage 2* (**P1.16**)
7	T15 Frequency %	The frequency reference is derived from *T15 Frequency Input Percentage* (**P1.17**)
8	Up/Down Percent	The frequency reference is derived from *Up/Down Percentage* (**P1.18**)
9	PID Percent	The frequency reference is derived from *PID Percentage* (**P1.19**)
10	Up/Down % in Hz	The frequency reference is derived from the *Up/Down Percentage* (**P1.18**) and displayed in Hz when controlled by the keypad

For inputs 0 - 4, the frequency references are transferred directly into the reference system. For inputs 5 - 9, the percentages selected are converted to Hz using parameters *Minimum Frequency Limit* (**P2.01**) and *Maximum Frequency Limit* (**P2.02**). The behaviour for input 10 is the same as 8 in this respect, with the only difference being how the display shows the value in Hz rather than %.

Figure 7-6 Percent to Frequency scaling

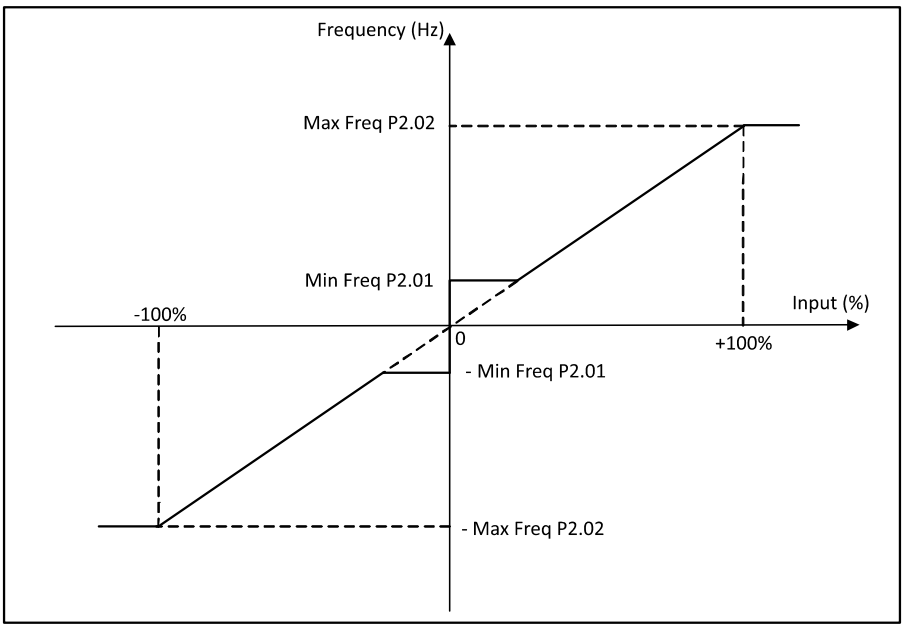

NOTE If this parameter is set to 0 (None), the drive will run at the *Minimum Frequency Limit* (**P2.01**).

NOTE The value of these parameters can be set by *Frequency Reference Configuration* (**P2.03**).

P2.25	**Skip Frequency**		
Range:	0.0 to *Maximum Frequency Limit* (**P2.02**)	Default:	0.0 Hz

The skip frequency function is available to prevent continuous operation within a specified frequency range (i.e. where mechanical resonance may occur). *Skip Frequency Band* (**P2.26**) defines the range either side of the value set here over which references are rejected in either direction.

Figure 7-7 Skip Frequency set up

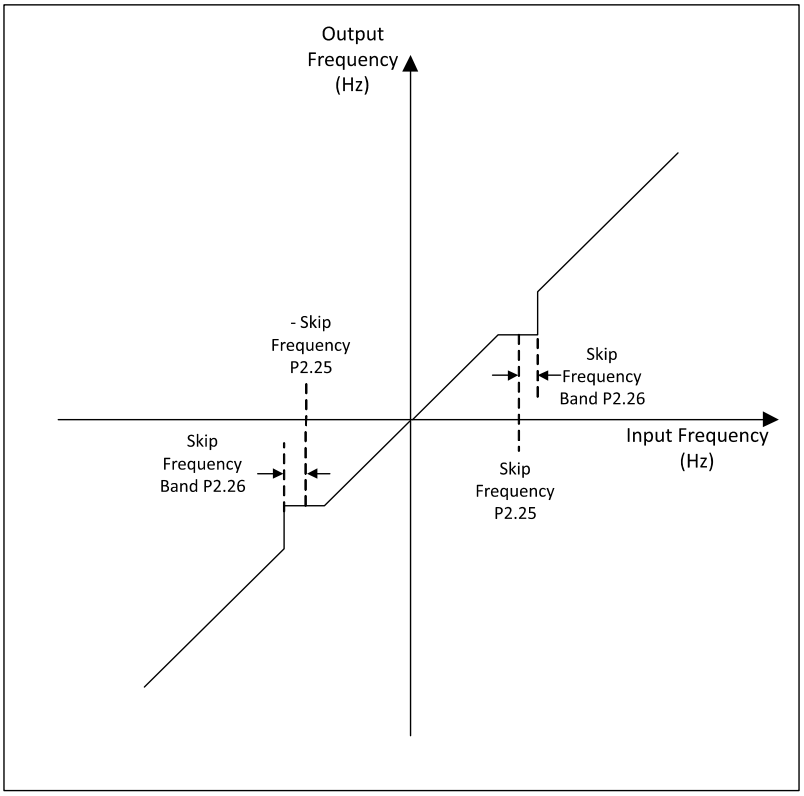

P2.26	**Skip Frequency Band**		
Range:	0.0 to 25.0 Hz	Default:	0.5 Hz

Defines the range either side of the skip reference to be skipped. See *Skip Frequency* (**P2.25**).

P2.27	**Fire Mode Reference**		
Range:	± *Maximum Frequency Limit* (**P2.02**)	Default:	0.0 Hz

The use of fire mode can result in damage to the drive.

When a digital input function is set as "Fire Mode" and the input is active, the drive enable and run signals are made active regardless of the state of hardware enable or software enable inputs and the *Ramp Input* (**P1.13**) is set to and held at the value of *Fire Mode Frequency* (**P2.27**).

In addition to this the following are true:

- A positive value of *Fire Mode Frequency* (**P2.27**) turns the motor forward and a negative value reverse
- Limit switches are disabled, and any limit switch flags are cleared
- The acceleration rate and S-ramp percentage are selected as normal
- Current limits behave as normal
- The enable/run latch is reset
- All other inputs are ignored
- The drive's internal fan is set to full speed

Errors

Once fire mode is active, only critical errors that prevent the drive from operating can occur. If any of the errors below occur, the drive will attempt to automatically reset the error after one second. Errors not deemed critical will be recorded in the error log but the drive will keep running.

If fire mode does suppress an error not deemed critical, when fire mode is deactivated the drive will generate an error E172 "Fire Mode Error".

Value	Description	Resettable
E001	D.C. Bus Over Voltage Instant	Yes
E002	D.C. Bus Over Voltage Delayed	Yes
E003	Output Over Current	Yes
E021	Inverter Model Over Temperature	Yes

Important Warning

WARNING

When Fire Mode is active the motor overload and thermal protection are disabled, as well as a number of drive protection functions. Fire Mode is provided for use only in emergency situations where the safety risk from disabling protection is less than the risk from the drive generating an error - typically in smoke extraction operation to permit evacuation of a building. The use of Fire Mode itself causes a risk of fire from overloading of the motor or drive, so it must only be used after careful consideration of the balance of risks.
Care must be taken to prevent inadvertent activation or de-activation of Fire Mode.
Care must be taken to ensure that the function Fire Mode (20) is not selected inadvertently in parameters **P5.17**, and **P6.14** to **P6.20**.
It is recommended that the drive parameters should be protected from un-authorized changes by using *Security PIN* (**P4.02**) to reduce the risk. The parameters listed may also be changed via serial communications so adequate precautions should be taken if this functionality is utilized.

P2.28	**Preset Frequency 5**		
Range:	± *Maximum Frequency Limit* (**P2.02**)	Default:	0.0 Hz

Used to provide a fixed frequency reference.

P2.29	**Preset Frequency 6**		
Range:	± *Maximum Frequency Limit* (**P2.02**)	Default:	0.0 Hz

Used to provide a fixed frequency reference.

P2.30	**Preset Frequency 7**		
Range:	± *Maximum Frequency Limit* (**P2.02**)	Default:	0.0 Hz

Used to provide a fixed frequency reference.

P2.31	**Preset Frequency 8**		
Range:	± *Maximum Frequency Limit* (**P2.02**)	Default:	0.0 Hz

Used to provide a fixed frequency reference.

7.3.3 Menu 3 - Motor setup

This menu contains parameters relating to motor setup and control.

P3.01	**Motor Rated Current**		
Range:	0.00 to Drive Rated Current (A)	Default:	Rating Dependent
Motor Rated Current must be set to the maximum continuous current of the motor (taken from the motor nameplate).			
P3.02	**Motor Rated Speed**		
Range:	0 to 18000 rpm	Default:	Region Dependent

Set to the rated speed of the motor from the motor nameplate for better speed control by allowing the drive to compensate for motor slip.

NOTE

Slip compensation can be disabled by setting Motor Rated Speed to synchronous speed or 0. If Motor Rated Speed is set to 0, *Number Of Motor Poles* (**P3.16**) must be set up manually for *Motor RPM* (**P1.04**) to indicate the correct speed.

P3.03	**Motor Rated Voltage**		
Range:	0 to Maximum Drive Output Voltage	Default:	Rating Dependent

Motor Rated Voltage must be set to the voltage rating of the motor (taken from the motor nameplate).

Motor Rated Voltage and *Motor Rated Frequency* (**P3.15**) define the voltage to frequency characteristic applied to the motor. See *Motor Control Mode* (**P3.05**) for more details.

Drive Voltage Rating	Region	Maximum Drive Output Voltage	Default
100 V	All	240 V	230 V
200 V			
400 V	50 Hz	480 V	400 V
	60 Hz	480 V	460 V

P3.04	**Motor Rated Power Factor**		
Range:	0.00 to 1.00	Default:	Rating Dependent
Motor Rated Power Factor is the rated power factor of the machine, cos φ (taken from the motor nameplate).			

P3.05 Motor Control Mode

Range:	0 to 2	Default:	1 (Linear V to F)

Defines the voltage characteristic applied to the motor

Value	Motor Control Mode	Description
0	Resistance Compensation	A linear frequency to voltage characteristic with stator resistance compensation.
1	Linear V to F	A fixed linear frequency to voltage characteristic.
2	Square V to F	A fixed square frequency to voltage characteristic.

The default mode of linear V to F is suitable for most applications. For fan and pump applications the Square V to F mode can be selected which matches the characteristic of the load. For applications that require good torque performance the Resistance Compensation mode should be used. For this mode of operation an auto-tune should be carried out to measure the stator resistance of the motor, or the resistance should be set up manually. An auto-tune can be carried out with *Perform Auto-tune* (**P3.09**).

Figure 7-8 Output Voltage Characteristic (Linear V to F)

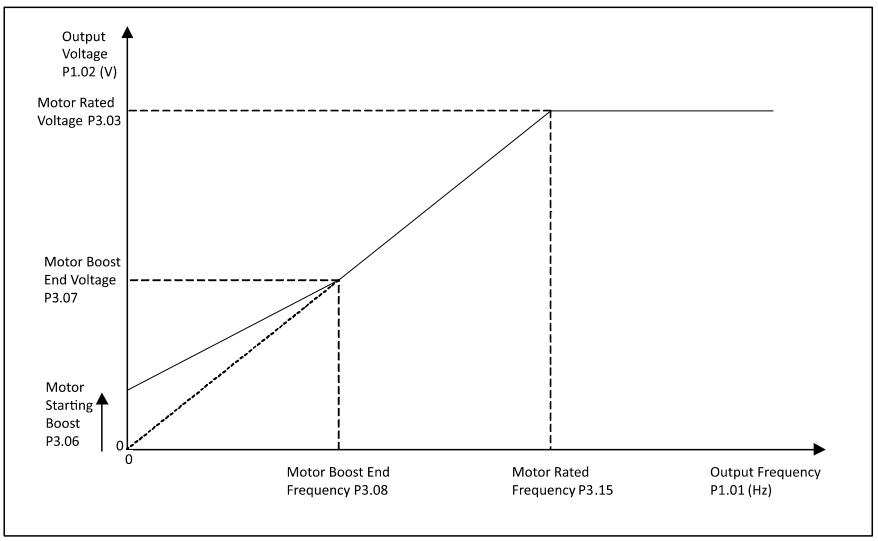

For Linear V to F, the voltage to frequency characteristic can be adjusted at two points, 0 Hz where the starting boost voltage is set in *Motor Starting Boost* (**P3.06**), and *Motor Starting Boost End Frequency* (**P3.08**), *Motor Starting Boost End Voltage* (**P3.07**) which is the frequency and voltage point at which the boost level is tapered to.

From the second adjustable point the voltage rises linearly towards the *Motor Rated Voltage* (**P3.03**) at *Motor Rated Frequency* (**P3.15**).

Above *Motor Rated Frequency* (**P3.15**), the voltage on the motor is constant and the field strength in the motor reduces as the frequency is increased.

Figure 7-9 Output Voltage Characteristic (Square V to F with boost)

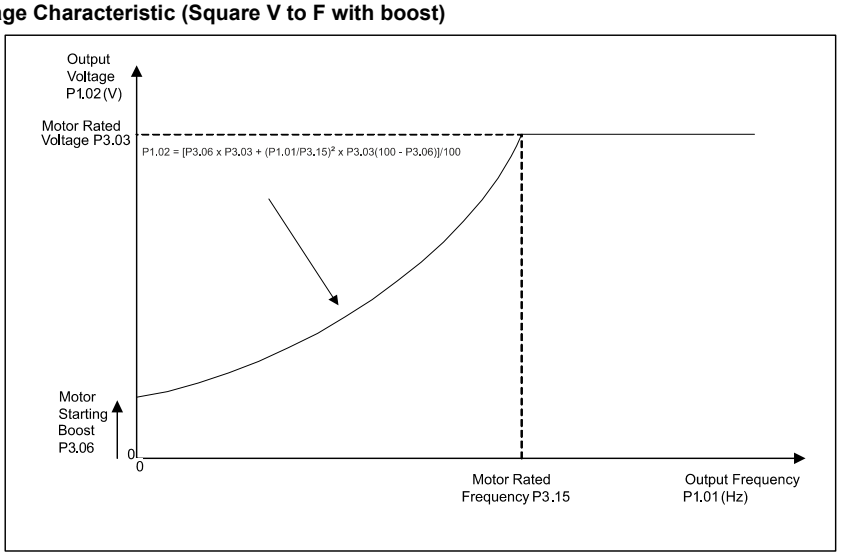

For Square V to F, only the starting boost is adjustable and the voltage output follows a square law from this point until the voltage reaches *Motor Rated Voltage* (**P3.03**) at *Motor Rated Frequency* (**P3.15**). At frequencies above this the motor voltage is constant.

P3.06	**Motor Starting Boost**		
Range:	0.0 to 25.0 %	Default:	3.0 %

Defines the level of voltage boost at 0 Hz as a percentage of the *Motor Rated Voltage* (**P3.03**) when *Motor Control Mode* (**P3.05**) is set to Linear V to F (1) or Square V to F (2). It can be used to increase low frequency torque performance, but if set too high will cause excessive motor current which could result in a Motor Overload error.

P3.07	**Motor Starting Boost End Voltage**		
Range:	0.0 to 100.0 %	Default:	50.0 %

Defines the level of voltage as a percentage of the *Motor Rated Voltage* (**P3.03**) at the *Motor Starting Boost End Frequency* (**P3.08**) when *Motor Control Mode* (**P3.05**) is set to Linear V to F (1).

P3.08	**Motor Starting Boost End Frequency**		
Range:	0.0 to 100.0 %	Default:	50.0 %

Defines the frequency as a percentage of the *Motor Rated Frequency* (**P3.15**) at which *Motor Starting Boost* (**P3.06**) has been faded out when *Motor Control Mode* (**P3.05**) is set to Linear V to F (1).

P3.09	**Perform Auto-tune**		
Range:	0 to 1	Default:	0

A stationary test to measure *Stator Resistance* (**P3.18**).

To perform an auto-tune:

Set this parameter to 1 and run the drive.

When the auto-tune sequence is completed successfully the drive is stopped and this parameter is set to 0.

The drive can be restarted by removing any run signals and activating them again.

NOTE

An auto-tune test cannot be initiated if the drive is in error or the drive inverter is active, i.e. Drive Healthy = 0 or Drive Running = 1 in *Drive Status Indicators* (**P1.10**).

The auto-tune test relies on the motor being stationary throughout the test to give accurate results.

P3.10	**Energy Optimizer**		
Range:	0 to 1	Default:	0 (Off)

Energy efficient motor control (sometimes referred to as Dynamic V to F) is intended for applications where power loss should be kept to a minimum under low load conditions, but dynamic (rapid acceleration) performance is not important.

P3.11	**Catch an Already Spinning Motor**		
Range:	0 to 3	Default:	0 (Disabled)

Defines the behaviour of the drive when the drive is enabled whilst the motor is rotating.

Value	Text	Description
0	Disabled	No attempt to detect the motor speed
1	Enabled	Detects the motor speed before starting
2	Forward Only	Detects forward motor speed only, starts at 0 Hz if motor rotating backwards
3	Reverse Only	Detects reverse motor speed only, starts at 0 Hz if motor rotating Forward

If it is possible that the motor is spinning when the run signal is given, then this parameter should be set for the required action. If this parameter is > 0, a test is carried out to measure the frequency that the motor is freewheeling at when the drive enters the run state. The measured frequency is used to give a smooth start at the motor speed detected. For the test to be successful it is important that the motor parameters, especially *Stator Resistance* (**P3.18**) and *Motor Rated Speed* (**P3.02**), are configured correctly.

P3.12	**PWM Switching Frequency**		
Range:	0 to 1	Default:	0 (4 kHz)

This parameter determines the maximum switching frequency. If PWM Switching Frequency is set to 1 (12 kHz Frame 1-3, 9 kHz Frame 4) under normal operating conditions the drive will use a switching frequency of 12 kHz (Frame 1-3), 9 kHz (Frame4) but, the drive will reduce the switching frequency to 4 kHz (Frame 1-3) 3 kHz (Frame 4) if the drive becomes too hot.

At higher switching frequencies, the acoustic noise from the motor will be reduced, but results in increased losses in the drive and the continuous output current is derated. See the information in section 10.1 *Drive derating*.

P3.13	**DC Braking Current Level**		
Range:	0.0 to 150.0 %	Default:	100.0 %

Defines the level of current used for injection braking as a percentage of *Motor Rated Current* (**P3.01**). See *Stopping Mode Selector* (**P2.04**). Excessive current can cause motor overheating.

P3.14	**DC Braking Time**		
Range:	0.0 to 100.0 s	Default:	1.0 s

Defines the time during which D.C. current is injected into the motor during timed injection stopping modes. See *Stopping Mode Selector* (**P2.04**). Excessive braking time when the motor speed is low can cause motor overheating due to reduced motor self-ventilation.

P3.15	**Motor Rated Frequency**		
Range:	0.0 to 300.0 Hz	Default:	Region Dependent (50 / 60 Hz)

Motor Rated Frequency must be set to the rated frequency of the motor (taken from the motor nameplate). The Motor Rated Frequency is used with *Motor Rated Voltage* (**P3.03**) to define the motor control characteristics. See *Motor Control Mode* (**P3.05**).

P3.16	**Number of Motor Poles**		
Range:	0 to 8	Default:	0 (Automatic)

If Number of Motor Poles = 0, the number of motor poles are calculated automatically as shown below:

Number of Motor Poles = 2 x 60 x *Motor Rated Frequency* (**P3.15**) / *Motor Rated Speed* (**P3.02**) rounded to the nearest integer.

The value can be entered manually but, if an odd number is entered, then the drive will use a value of motor poles one less than the number entered.

P3.17	**Torque Current Limit**		
Range:	0.0 to Torque Current Maximum Limit	Default:	Rating Dependent

The drive can supply a maximum output current of 150 % of the drive rated current. 150 % of the drive rated current will not be equal to 150 % of the motor rated torque current. The limit may be increased from the default setting depending on the setting *Motor Rated Power Factor* (**P3.04**) and *Motor Rated Current* (**P3.01**). This parameter can be used to set the limit of the output current as a percentage of the motor's torque producing current.

This percentage torque can be limited if required.

Figure 7-10 Torque Current Limit

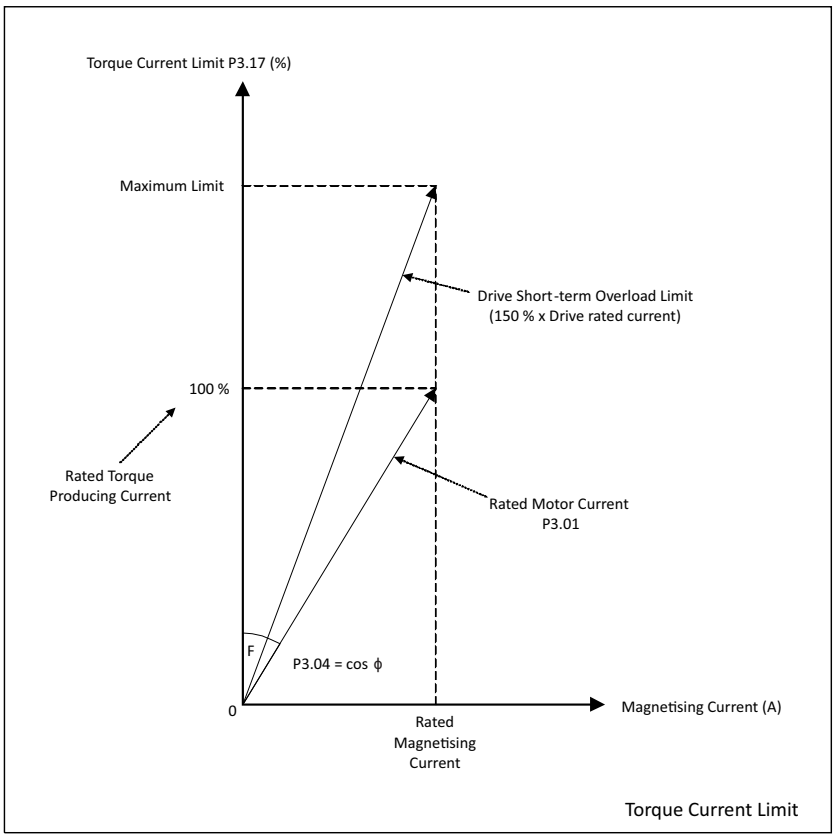

P3.18	**Stator Resistance**		
Range:	0.00 to 199.99 Ω	Default:	2.00 Ω

The stator resistance of the motor. This is used when *Motor Control Mode* (**P3.05**) is set to resistance compensation, and also when *Catch An Already Spinning Motor* (**P3.11**) is enabled. This value is populated when *Perform Auto-tune* (**P3.09**) has been performed and can also be adjusted manually.

P3.19	**Motor Stability Optimizer**		
Range:	0 to 1	Default:	0 (Disabled)

When enabled, the motor control algorithm is changed to help reduce stability problems. This is typically required when lightly loaded motors exhibit stability issues below half rated speed, or when motors exhibit instability at maximum output voltage.

The disadvantages of setting this parameter are increased acoustic noise from the motor and a reduction in the thermal capability of the drive at low output frequencies.

P3.20	**Reverse Motor Direction**		
Range:	0 to 1	Default:	0 (Normal Operation)

If the motor direction does not match the required forward and reverse control signals, this parameter can be used to change the motor direction without the need to swap output cables. Changes to this parameter will only take effect when the drive is not running.

NOTE This reverses the output phase sequence for the selected forward and reverse directions which is non-standard.

P3.21	**Thermal Protection Action**		
Range:	0 to 4	Default:	3 (Limit with Save)

Set the required thermal protection action as below:

Value	Thermal Protection Action	Description
0	Disabled	No motor thermal protection but drive thermal protection is still active.
1	Error with Save	Drive generates an Error when Limit reached. Motor and Drive thermal protection percentages are stored at power down.
2	Error	Drive generates an Error when Limit reached. Motor and Drive thermal protection percentages start at 0 % at power up.
3	Limit with Save	Current is limited if drive or motor thermal percentage approaches 100 %. Motor and Drive percentages are stored at power down.
4	Limit	Current is limited if drive or motor thermal percentage approaches 100 %. Motor and Drive percentages start at 0 % at power up.

If any of the current limiting modes are selected, both *Motor Thermal Percentage* (**P1.22**) and *Drive Thermal Percentage* (**P1.23**) will cause the current limit to be reduced. If thermal limiting is active, bit 2 is set in *Drive Status Indicators* (**P1.10**).

P3.22	**Low Frequency Thermal Protection**		
Range:	0 to 1	Default:	1 (On)

If a motor with a shaft mounted fan is likely to run with high loads at low frequencies, then this parameter should be set to 1 (On) to protect the motor thermally. The drive does this by reducing the level at which it considers the motor to be in overload to 70 % of the motor rated current when operating below 50 % of the motor's rated frequency.

Figure 7-11 Low Frequency Thermal Protection = On (1)

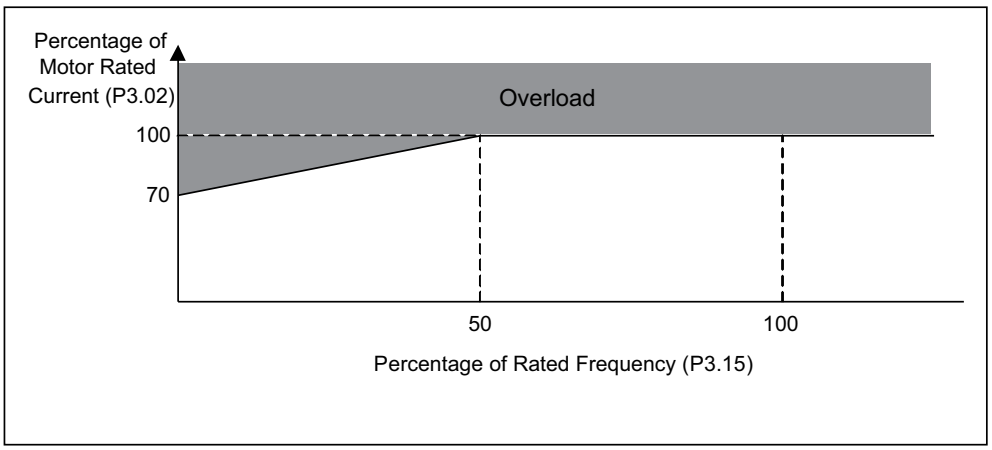

P3.23	**Current Controller Gain**		
Range:	0 to 250	Default:	40

Used to adjust the gain of the current controller. This does not normally need to be adjusted, but it can be reduced if there is evidence of motor noise during current limiting. Increasing the value may be required if Standard Ramp (1) or Ramp + Motor Loss (2) are being used in *Deceleration Ramp Type* (**P2.11**) with a high inertia load, or if *Supply Loss Action* (**P4.08**) > 0, as the increased gain will help the control of the D.C. link voltage during these operations.

P3.24	**Motor Pre-Heat Current Magnitude**		
Range:	0 to 100	Default:	5

Defines the current in the motor when the drive is in pre-heat. The current is specified as a percentage of the motor rated current. Pre-heat can be activated with the digital input function Motor Pre-Heat (21) and the drive will enter the pre-heat state when the run signal is removed and the motor reaches standstill.

This is intended for applications where there is no motor load at standstill, but motor curent is required to prevent condensation in the motor when it is stopped. If the motor is not force cooled the motor cooling is less effective at standstill than when the motor is rotating, and so care should be taken not to damage the motor by leaving it at standstill for prolonged periods with a high level of current.

7.3.4 Menu 4 - General

This menu contains parameters related to the general drive settings, communication setup parameters and miscellaneous functions such as defining parameter values to store when an error occurs.

Figure 7-12 Menu 4 - General

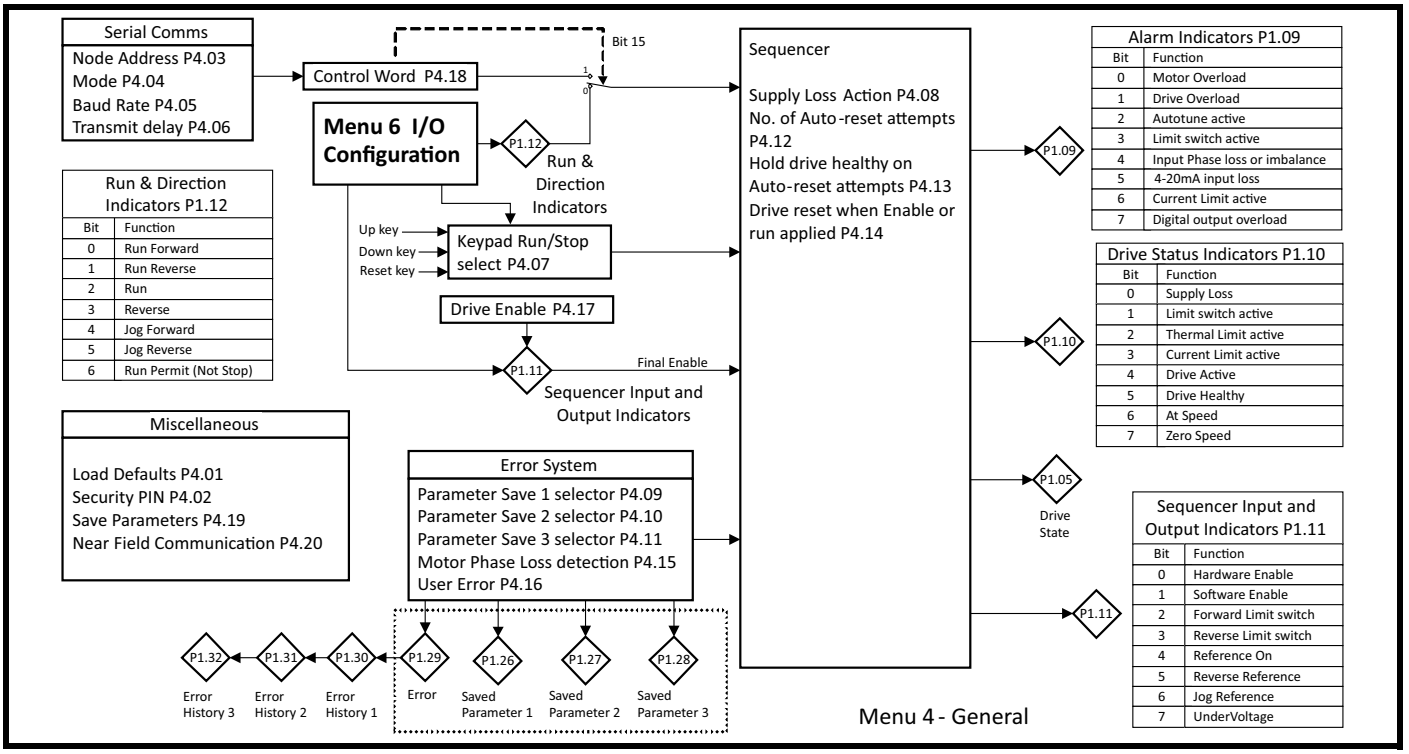

P4.01	**Restore Factory Defaults**		
Range:	0 to 2	Default:	0 (None)

Restores the default parameter settings of the drive and will clear any user configured parameter settings.

Value	Text	Description
0	None	No action
1	50 Hz	Restore Factory Defaults for 50 Hz region
2	60 Hz	Restore Factory Defaults for 60 Hz region

If this parameter is set to a value other than 0, then the drive will load the appropriate defaults and save parameters. This parameter will be reset to 0 after the action is completed. If editing on the keypad the action will be performed when the edit is finished by pressing the settings button.

Restoring factory defaults cannot be undone.

NOTE If there is an attempt to restore defaults while the drive is running, the defaults will not be restored until the drive stops.

P4.02	**Security PIN**		
Range:	0 to 9999	Default:	0

Defines the 4 digit security pin of the drive. This parameter can be set to a value other than 0 to prevent unauthorized write access to the drive. When a value greater than 0 has been set, it will not be displayed on the keypad or Marshal app to maintain security. If a value has been set, the security pin must be entered before any parameter can be adjusted via the keypad or prior to writing parameters to the drive via Marshal.

P4.03	**Serial Node Address**		
Range:	1 to 247	Default:	1

Defines the serial address of the drive.

P4.04	**Serial Mode**		
Range:	0 to 3	Default:	0 (8.2NP)

Defines the serial mode of the drive.

Value	Serial Mode	Description
0	8.2NP	8 data bits, 2 stop bits, no parity bit
1	8.1NP	8 data bits, 1 stop bit, no parity bit
2	8.1EP	8 data bits, 1 stop bit, even parity bit
3	8.1OP	8 data bits, 1 stop bit, odd parity bit

The drive always uses MODBUS RTU and is always a slave. All parameters can be accessed as 16-bit registers.

P4.05	**Serial Baud Rate**		
Range:	0 to 10	Default:	10 (115200 bps)

Defines the serial baud rate of the drive.

Value	Baud Rate
0	Disabled
1	600
2	1200
3	2400
4	4800
5	9600
6	19200
7	38400
8	57600
9	76800
10	115200

When using a PC to communicate with the drive at the higher baud rates, the latency timer for the PC comms port should be set to 1 ms using the device manager on the PC.

P4.06	**Minimum Serial Comms Transmit Delay**		
Range:	0 to 250 ms	Default:	0 ms

Defines the delay in the drive responding to a message from the host. This may need to be extended if the host is not ready to receive data within 1 ms of the drive receiving a message. This delay is added to a base delay of 1 ms.

P4.07	**Keypad Run and Stop Function Select**		
Range:	0 to 2	Default:	0 (None)

Selects the function of the Reset and Up/Down buttons for running and stopping the drive.

Value	Keypad Button Function	Description
0	None	The keypad cannot be used to run and stop the drive
1	Run and Stop	Pressing the UP and DOWN buttons together will cause the drive to run, and pressing the STOP/ RESET button will cause the drive to stop
2	Jog	Holding the UP and DOWN buttons together will cause the drive to jog in the forward direction at the programmed jog speed

This parameter also applies to the red (stop) and green (run) buttons on the remote keypad if it is connected.

NOTE

The value of this parameter can be set by *Run/Stop Configuration* (**P6.13**).

P4.08	**Supply Loss Action**		
Range:	0 to 2	Default:	0 (Disable)

Defines the behaviour of the drive when the supply voltage is removed.

Value	Supply Loss Action	Description
0	Disable	Operate normally unless the under voltage condition is detected
1	Ramp Stop	Attempts to control the D.C. Bus voltage to take energy from the motor and stops with selected deceleration if the supply returns
2	Ride Through	Attempts to control the D.C. Bus voltage to take energy from the motor and continues normally if the supply returns

If the supply voltage returns during a Ramp Stop or before the drive has shut down, the run signal needs to be removed and reapplied before the drive will run again.

P4.09	**Parameter 1 Save on Error Selector**		
Range:	0 to 25	Default:	14 (Ramp Output)

P4.10	**Parameter 2 Save on Error Selector**		
Range:	0 to 25	Default:	6 (Output Current)

P4.11 Parameter 3 Save on Error Selector

Range:	0 to 25	Default:	24 (D.C. Bus Voltage)

Defines which monitoring parameter is to be saved on an error. This can be useful to locate the source of the error.

Value	Saved Parameter	Value	Saved Parameter	Value	Saved Parameter
0	None	9	Alarm Indicators	19	PID Percentage
1	Output Frequency	10	Status Indicators	20	PID Indicators
2	Output Voltage	11	Sequencer Indicators	21	PID Error
3	Output Power	12	Run and Direction	22	Motor Thermal %
4	Motor RPM	13	Ramp Input	23	Drive Thermal %
5	Drive State	14	Ramp Output	24	D.C. Bus Voltage
6	Output Current	15	T2 Analog 1 %	25	IO Indicators
7	Torque Current	16	T4 Analog 2 %		
8	Percentage Load	17	T15 Frequency %		

The values are saved in *Parameter 1 Saved Value on Error* (**P1.26**), *Parameter 2 Saved Value on Error* (**P1.27**), and *Parameter 3 Saved Value on Error* (**P1.28**).

The saved values and error code are maintained after the error has been reset.

P4.12 Number of Auto Reset Attempts

Range:	0 to 6	Default:	0

Set to the number of required auto reset attempts.

Value	Number of Auto Reset Attempts
0 to 5	None to Five
6	Unlimited

If the drive enters an Error state, it can automatically attempt to reset.

Setting this parameter ≥ 1 will cause the drive to automatically reset following an error for the number of times programmed after a delay of one second. Some errors have extended delays such as *motor over current* which will reset after ten seconds. The auto reset count is only incremented when the error is the same as the previous error otherwise it is reset to zero. When the auto reset count reaches the programmed value, any further error of the same value will require a manual reset from the keypad or via serial comms.

If no error has been initiated for five minutes then the auto reset count is cleared.

Some errors cannot be reset such as a Ground Fault E228.

When a manual reset is performed the auto reset counter is reset to zero.

If this parameter is set to 6 (Unlimited) the auto reset counter is held at zero and so there is no limit on the number of auto reset attempts.

P4.13 Hold Drive Healthy on Auto Reset Attempts

Range:	0 to 1	Default:	0 (Off)

If this parameter is set to Off (0) then Bit 5 (Healthy) in *Drive Status Indicators* (**P1.10**) is set to 0 every time the drive generates an error regardless of any auto reset that may occur. If it is set to On (1), then Bit 5 (Healthy) remains at 1 when an error occurs if further auto reset attempts are possible.

NOTE

If the under voltage state becomes active Bit 5 (Healthy) in *Drive Status Indicators* (**P1.10**) is always set to 0.

P4.14 Drive Reset When Enable or Run Applied

Range:	0 to 1	Default:	1 (On)

Errors are automatically reset on the application of an enable or run signal. This feature can be disabled by setting this parameter to Off (0).

P4.15 Motor Phase Loss Detection

Range:	0 to 1	Default:	0 (Off)

Motor phase loss detection can be used to detect a disconnected motor phase or a break in the wire between the drive and the motor. This feature can be enabled by setting this parameter to On (1).

P4.16 User Error

Range:	0 to 255	Default:	0

An error number can be written to this parameter to generate that error in the drive, or a different (user defined) error if the number written is unused by the drive. This parameter can also be used to reset errors and clear the error log:
Set to 255 to clear the error history.
Set to 100 to reset the drive.
Setting to 0 will not result in an error.

Errors related to the EEPROM and non-resettable errors cannot be initiated via this parameter.

P4.17 Drive Enable

Range:	0 to 1	Default:	1 (On)

This must be set to On (1) to enable the drive unless *Binary Control Word* (**P4.18**) is enabled.

Figure 7-13 Drive Enable

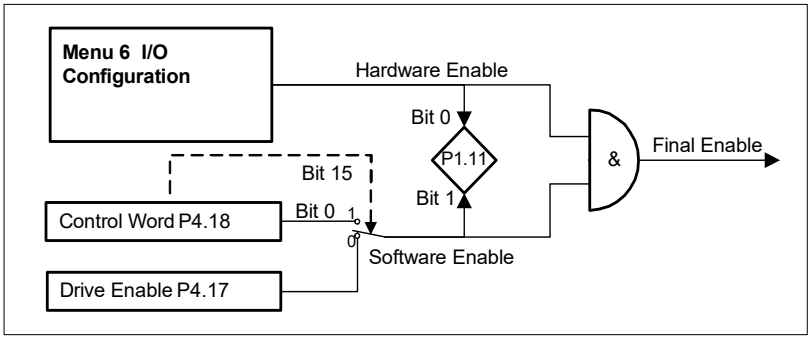

P4.18 Binary Control Word

Range:	0 to 65535 (Binary 16 bit)	Default:	0

If Bit 15 in this parameter is set to zero then the parameter has no effect, but if it is set to one it overrides all of the corresponding inputs to the sequencer and other digital input functions shown in the table below. Once the control word has been enabled, it must continue to be written to at least once a second to prevent a watchdog timeout from being generated (Error 30). To extend the watchdog timeout to 60 seconds set Bit 11. Disabling the control word returns the drive to terminal control and the parameter no longer needs to be refreshed to prevent the watchdog timeout.

This should only be used by serial comms.

If a hardware enable is configured this will also be needed to enable the drive.

Bit	Function	Description
Bit 0	Software Enable	Set to 1 to enable the drive
Bit 1	Run Forward	Set to 1 to run forward
Bit 2	Jog Forward	Set to 1 to jog forward
Bit 3	Run Reverse	Set to 1 to run in the reverse direction
Bit 4	Reverse	Set to 1 to reverse the direction
Bit 5	Run	Set to 1 to run
Bit 6	Run Permit (Not Stop)	Set to 1 to enable latching which will be cleared when set to 0
Bit 7	Frequency Switch bit 0	Used to select which reference is used by the reference system
Bit 8	Frequency Switch bit 1	Used to select which reference is used by the reference system
Bit 9	Jog Reverse	Set to 1 to jog in the reverse direction
Bit 10	Ramp Rate Selector	Used to select which ramp rates are used by the ramp system
Bit 11	Extend Timeout	Set to 1 to extend the watchdog timeout from 1 second to 60 seconds
Bit 12	Initiate Error	Set to 1 to repeatedly initiate the Control Word error (E035)
Bit 13	Reset Drive	Set to 1 to reset the drive, clearing errors. This is automatically cleared
Bit 14	Reserved	Not used by the drive
Bit 15	Enable Control Word	Set to 1 to enable the binary control word

P4.19 Save Parameters

Range:	0 to 1	Default:	0 (Off)

This parameter is intended to be used after parameters have been set by serial communications. If this parameter is set to On (1) then a full save will be initiated. When the save is complete the parameter will be automatically reset to Off (0).

This parameter is not required when editing a parameter through the keypad or Marshal because a save is performed when pressing the settings button or after parameters have been written to the drive by Marshal.

P4.20 Near Field Communication (NFC)

Range:	0 to 2	Default:	2 (Read & Write)

This parameter can be used to prevent or restrict NFC control via Marshal

Value	NFC Allowed Actions	Description
0	Disabled	NFC communications are blocked
1	Read Only	The drive's NFC can be read offline by the app, and while on, drive configuration files and parameters can be read
2	Read & Write	The drive's NFC features are fully enabled

NOTE

If a security PIN is set in *Security PIN* (**P4.02**) this will apply to Marshal and parameters will not be able to be changed unless the PIN is provided.

P4.21	**Power Up Action**		
Range:	0 to 1	Default:	0 (Allow Run)

Defines the behaviour of the drive when mains power is applied.

Value	Text	Description
0	Allow Run	When the drive is powered up with the run already enabled the drive will run
1	Re-apply Run	When the drive is powered up with the run already enabled the run signal must be removed and re-applied

P4.22	**Reset Energy Usage**		
Range:	0 to 1	Default:	0

Set to 1 to reset the value of *Energy Usage* (**P1.34**).

7.3.5 Menu 5 - PID controller

The Commander S100 has a dedicated PI (Proportional-Integral) control loop that is suitable for use in applications requiring basic closed-loop control of a system or process. The output of the PID Controller, *PID Output Percentage* (**P1.19**), can be used to control the speed of the motor when selected as a reference in *Frequency Reference 1 Selector* (**P2.21**) or in another reference selector parameter. *Frequency Reference Configuration* (**P2.03**) can be set to quickly configure the PID output as the drive reference with the settings shown in Table 7-2. There is also a guided setup in Marshal with easy access to all relevant parameters.

Table 7-2 Frequency reference configuration (P2.03) PID

Value	Text	Description
8	PID Voltage Ref.	A voltage input on T2 analog input 1 as the reference, and a current input on T4 analog input 2 as the feed-back. The PID output is used as the drive frequency reference.
9	PID + Feed Forward	A voltage input on T2 analog input 1 as the Feed Forward, and a current input on T4 analog input 2 as the feedback, the reference is fixed. The PID output is used as the drive frequency reference.

Figure 7-14 PID controller overview

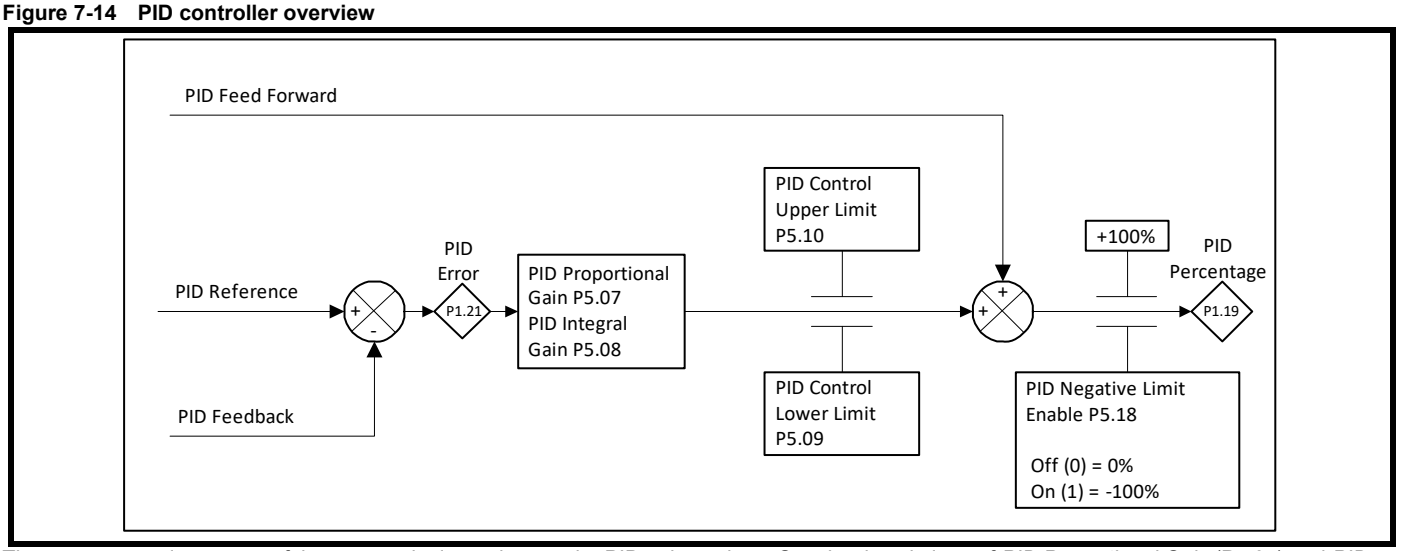

The response and accuracy of the process is dependent on the PID gain settings. See the descriptions of *PID Proportional Gain* (**P5.07**) and *PID Integral Gain* (**P5.08**) for setting instructions and more information. In the Commander S100 PID Controller the differential term is fixed to 0.

The rate of change of the *PID Reference* (**P5.03**) can be limited by the *PID Reference Slew Rate Limit* (**P5.06**). This may be useful to limit the system overshoot when the setpoint is changed.

Common PID applications

Pressure control

The system will regulate a constant pressure to a process setpoint, where an analog signal proportional to pressure is fed back to the PID loop. The speed demand for the drive should vary inversely proportional to the system process error i.e. as the pressure increases the drive's speed decreases and vice versa.

Level control

The system will regulate a constant level to a process setpoint, where an analog signal proportional to level is fed back to the PID loop. The speed demand for the drive should vary proportional to the system process error i.e. as the level increases, the drive's speed increases and vice versa (assuming level control is on output side of the application).

Temperature control

The system will regulate a constant temperature to a process setpoint by varying a cooling fan speed. An analog signal proportional to temperature is fed back to the PID loop. The speed demand for the drive should vary proportional to the system process error i.e. as the temperature increases the drive's speed increases and vice versa.

PID logic

Built into the PID Controller are a range of tools to control when the PID becomes active and how the output should be interpreted. Under the default settings, the PID is always enabled and will be used if *PID Output Percentage* (**P1.19**) is used as the drive reference. However, setting *PID Enable Selector* (**P5.11**) or selecting *PID Hardware Enable* (13) as the function of a digital input will disable the PID unless the PID enable condition is active or there is an active PID Hardware Enable signal. If both of these settings are configured, then both the enable condition and hardware enable signal must be active to enable the PID. *PID Status Indicators* (**P1.20**) can be used to monitor the PID enable state and other logic.

Inverting PID signals

When setting up a system, it is important to consider how the system should respond to an increasing feedback signal compared to a decreasing feedback signal. If the frequency reference should increase when the feedback decreases, then the feedback should be inverted. This can be done using the input terminal's (T2 analog input 1, T4 analog input 2 or T15 Frequency Input) 4-point scaling parameters P6.21 to P6.32.

The scaling parameters refer to input level as a percentage as the units can change depending on the type of input. For example, under default settings of the scaling parameters for T2 analog input 1, 0 V = 0 % and 10 V = 100 %. If *T2 Analog Input 1 Type* (**P6.01**) ≥ 2, then 4 mA = 0 % and 20 mA = 100 %.

To invert this so 4 mA = 100 % and 20 mA = 0 %, the values at the minimum input and maximum input need to be switched as described in Table 7-3.

Table 7-3 Inverting input signals

Parameter				Default Settings	Setting to Invert
Name	**T2 Analog Input 1**	**T4 Analog Input 2**	**T15 Frequency Input**		
Minimum Input	P6.21	P6.25	P6.29	0 %	0 %
Percentage at Minimum Input	P6.22	P6.26	P6.30	0 %	100 %
Maximum Input	P6.23	P6.27	P6.31	100 %	100 %
Percentage at Maximum Input	P6.24	P6.28	P6.32	100 %	0 %

For information on reducing the range, offsetting, inverting and switching the polarity using the 4-point scaling parameters, see *T2 Analog Input Minimum Input* (**P6.21**).

Figure 7-15 PID controller block diagram

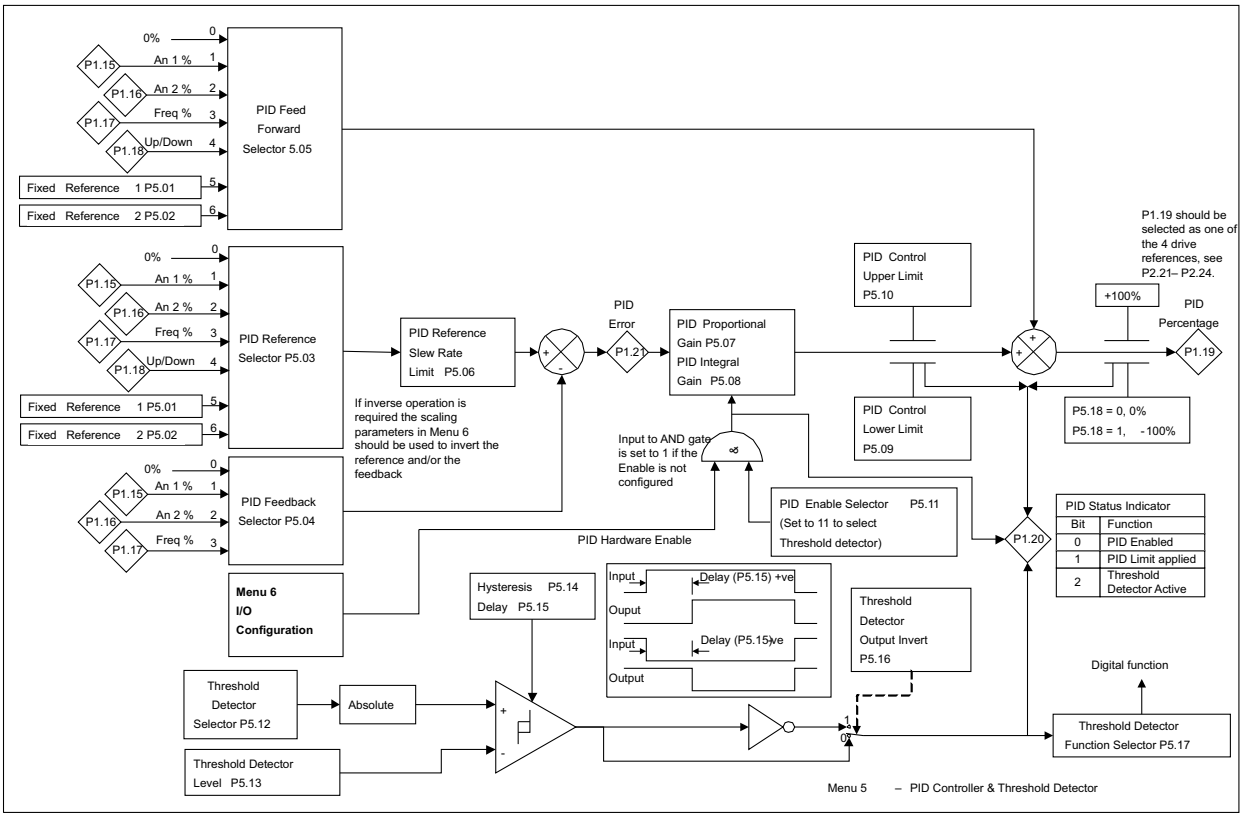

P5.01	**PID Fixed Reference Setpoint 1**		
P5.02	**PID Fixed Reference Setpoint 2**		
Range:	-100.00 to 100.00 %	Default:	0.00 %
Used where a setpoint for the controller is fixed and does not change, or could be updated via serial comms.			

P5.03 PID Reference Selector

Range:	0 to 6	Default:	5 (Fixed Reference 1)

Defines the input source for the reference of the PID controller.

Value	PID Reference	Description
0	None	Fixed value of 0 %
1	T2 Analog 1 %	Scaled value of analog input 1
2	T4 Analog 2 %	Scaled value of analog input 2
3	T15 Frequency %	Scaled value of the frequency input
4	Up/Down %	Reference set by the Up/Down control
5	Fixed Reference 1	*Fixed reference setpoint 1* (**P5.01**)
6	Fixed Reference 2	*Fixed reference setpoint 2* (**P5.02**)

NOTE the value of this parameter can be set by *Frequency Reference Configuration* (**P2.03**).

P5.04 PID Feedback Selector

Range:	0 to 3	Default:	0 (None)

Defines the input source for the feedback of the PID controller.

Value	PID Feedback	Description
0	None	Fixed value of 0 %
1	T2 Analog 1 %	Scaled value of analog input 1
2	T4 Analog 2 %	Scaled value of analog input 2
3	T15 Frequency %	Scaled value of the frequency input

NOTE the value of this parameter can be set by *Frequency Reference Configuration* (**P2.03**).

P5.05 PID Feed Forward Selector

Range:	0 to 6	Default:	0 (None)

Defines the input source for the feed-forward reference of the PID controller.

Value	PID Feed Forward	Description
0	None	Fixed value of 0 %
1	T2 Analog 1 %	Scaled value of analog input 1
2	T4 Analog 2 %	Scaled value of analog input 2
3	T15 Frequency %	Scaled value of the frequency input
4	Up/Down %	Reference set by the Up/Down control
5	Fixed Reference 1	*Fixed reference setpoint 1* (**P5.01**)
6	Fixed Reference 2	*Fixed reference setpoint 2* (**P5.02**)

The PID can be used to provide a speed reference for the drive directly, or to provide a trim which is used to adjust a reference provided for the drive.

If this parameter is set to zero, PID Percent is given by:
PID Output Percentage (**P1.19**) = *PID Error* (**P1.21**) * [*PID Proportional Gain* (**P5.07**) + *PID Integral Gain* (**P5.08**) / s]

If an input has been selected as a feed Forward term, PID Percent is given by:
PID Output Percentage (**P1.19**) = *PID Error* (**P1.21**) * [*PID Proportional Gain* (**P5.07**) + *PID Integral Gain* (**P5.08**) / s] + Feed Forward Reference

The PID integrator is held when the PID output reaches either of the limits *PID Output Lower Limit* (**P5.09**) or *PID Output Upper Limit* (**P5.10**).

NOTE the value of this parameter can be set by *Frequency Reference Configuration* (**P2.03**).

P5.06 PID Reference Slew Rate Limit

Range:	0.0 to 3200.0 s	Default:	0.0 s

Defines the maximum rate of change of the reference to the PID controller.

The time entered is the time for the reference to change from 0 to 100 %. If using high PID gains, this parameter can be used to reduce over-shoot of a large step change in the PID reference.

P5.07 PID Proportional Gain

Range:	0.000 to 4.000	Default:	1.000

The proportional gain is the instantaneous amplification factor that is applied to the process error.

This value is multiplied with the *PID Error* (**P1.21**).

If *PID Error* (**P1.21**) = 10 % and a proportional gain of 1.000, then the proportional term is a value of 10 %.

A higher value will reduce response time. However, if the value is set too high it may introduce oscillation in the system.

P5.08	**PID Integral Gain**		
Range:	0.000 to 4.000	Default:	0.500

The integral gain is an amplification factor of the error over time.

The PID integral gain increases the *PID Output Percentage* (**P1.19**) at a rate proportional to the error and the gain.

Setting a value of 0 disables the integral term. Setting an integral value will remove any steady state error.

For a *PID error* = 10 % and an integral gain of 0.5, then the integral term increases linearly by 5 % per second.

P5.09	**PID Output Lower Limit**		
Range:	-100.00 to 100.00 %	Default:	0.00 %

The output of the PID controller is limited to this level. If the limit is reached, Bit 1 in *PID Status Indicators* (**P1.20**) is set and the integrator is prevented from decreasing further.

P5.10	**PID Output Upper Limit**		
Range:	0.00 to 100.00 %	Default:	100.00 %

The output of the PID controller is limited to this level. If the limit is reached, Bit 1 in *PID Status Indicators* (**P1.20**) is set and the integrator is prevented from increasing further.

P5.11	**PID Enable Selector**		
Range:	0 to 11	Default:	0 (Disabled)

Selects an internal condition that can be used to enable the PID controller.

Value	PID Enable Condition	Description
0	Disabled	Always Off
1	Drive Running	Enabled if the drive is running
2	At Speed	Enabled if the output speed is within 1 Hz of the reference
3	At Zero	Enabled if the output is at 0 Hz +/- 2 Hz
4	Under Voltage	Enabled if the drive is in the under voltage state
5	External Error	Enabled if the external error input has been set
6	Drive Ready	Enabled if the drive is ready to run (not inhibited by a hardware enable input)
7	Drive Healthy	Enabled if the drive is healthy (not in error) (active alarms do not make the drive unhealthy)
8	Current Limit	Enabled if the drive is limiting the output current
9	Reverse Running	Enabled if the drive is running in the reverse direction
10	Current Loss	Enabled if an analog input current loss has been detected
11	Threshold Detect	Enabled if the threshold detector is active

If it is required that an internal condition should be used to enable the PID, this parameter should be set to the required condition. For example, if it is required that the Threshold Detector should enable the PID, this parameter should be set to 11.

Enabling the PID is dependent on two conditions, the value set in this parameter and any digital input function that has been configured to PID Hardware Enable (13).

Bit 0 in *PID Status Indicators* (**P1.20**) indicates whether the PID is enabled or not.

NOTE the value of this parameter can be set by *Frequency Reference Configuration* (**P2.03**).

P5.12	**Threshold Detector Selector**		
Range:	0 to 15	Default:	0 (None)

Selects the input to the threshold detector.

Value	Threshold Detector Input	Description
0	None	0 %
1	Ramp Input	The drive frequency reference before the ramps
2	Ramp Output	The drive frequency reference after the ramp has been applied
3	Output Frequency	The output frequency of the drive
4	Output Current	The magnitude of the output current
5	Torque Prod Current	The torque producing output current
6	Output Voltage	The output voltage
7	D.C. Bus Voltage	The D.C. bus voltage
8	T2 Analog 1 %	The value of analog 1 percentage
9	T4 Analog 2 %	The value of analog 2 percentage
10	T15 Frequency %	The value of the frequency input percentage
11	Output Power	The output power
12	Motor RPM	The motor RPM
13	Percentage Load	The percentage load
14	PID Percentage	The percentage output of the PID controller
15	PID Error	The error of the PID controller

An automatic scaling takes place when parameters are selected as a threshold source such that the threshold input will be at 100 % when the parameter value is at its maximum.

P5.13	**Threshold Detector Level**		
Range:	0.00 to 100.00 %	Default:	0.00 %

P5.14	**Threshold Detector Hysteresis**		
Range:	0.00 to 25.00 %	Default:	0.00 %

The absolute level of the threshold input selected by *Threshold Detector Selector* (**P5.12**) is converted to a percentage and compared to the threshold detector level with hysteresis to determine the detector output. The hysteresis behaviour and levels are described below.

***Threshold Input* (P5.12) after scaling**	**Output**
Threshold Input < Lower Threshold	Off
Lower Threshold ≤ Threshold Input < Upper Threshold	No change of state
Threshold Input ≥ Upper Threshold	On

Lower Threshold = *Threshold Detector Level* (**P5.13**) - (*Threshold Detector Hysteresis* (**P5.14**) / 2)

Upper Threshold = *Threshold Detector Level* (**P5.13**) + (*Threshold Detector Hysteresis* (**P5.14**) / 2)

P5.15	**Threshold Detector Delay**		
Range:	±3000.0 s	Default:	0.0 s

If set to a positive value then the Threshold Output does not become On (1) until the input has been above the threshold for the programmed period of time. If set to a negative value then the Threshold Output remains On (1) until the input has been below the threshold for the programmed period of time.

Figure 7-16 Threshold Detector - Positive Delay

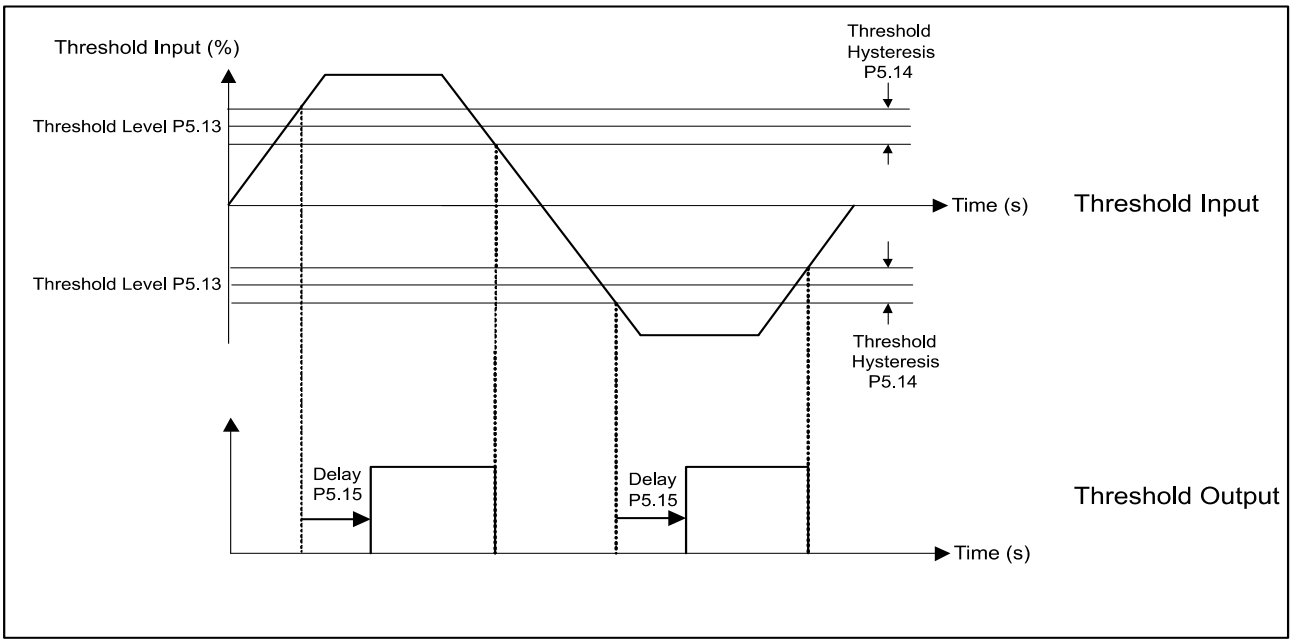

Figure 7-17 Threshold Detector - Negative Delay

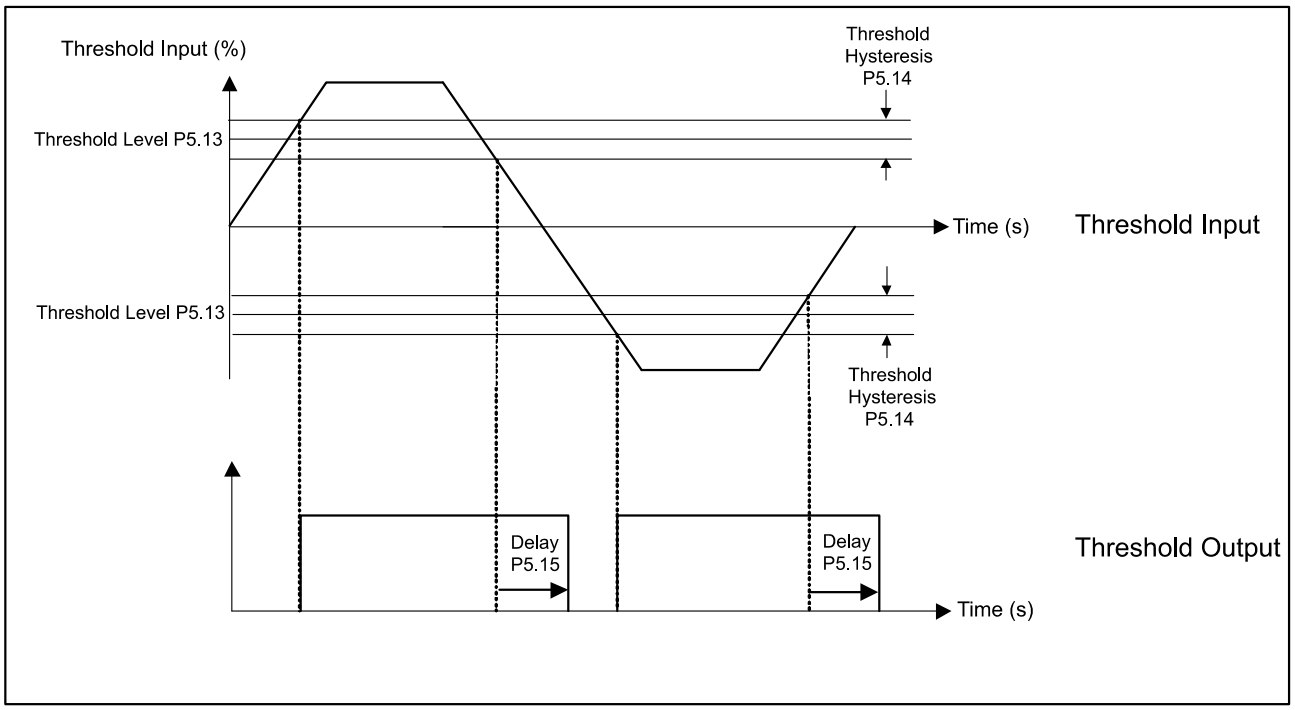

P5.16	**Threshold Detector Output Invert**		
Range:	0 to 1	Default:	0

Set to 1 to invert the logic level from the Threshold Detector.

The Threshold Detector output is shown in bit 2 of *PID Status Indicators* (**P1.20**).

P5.17 Threshold Detector Function Select

Range:	0 to 22	Default:	0 (None)

Selects the function of the threshold detector. If the threshold detector is to be used to enable the PID, then this parameter should be set to 0 and *PID Enable Selector* (**P5.11**) should be set to *Threshold Detector* (11).

Value	Threshold Detector Output	Description
0	None	No Digital Function
1	Hardware Enable	Allows the drive to come out of the inhibit state. If a hardware enable has not been configured, the drive will run without one
2	Run Forward	Commands the drive to run forward
3	Run Reverse	Commands the drive to run reverse
4	Run Permit	Permits a Run signal when set, resets any run latch when clear (enables latching when selected as a function)
5	Forward Limit Switch	Prevents a run in the forward direction
6	Reverse Limit Switch	Prevents a run in the reverse direction
7	Up/Down % Increase	Increases the Up/Down percentage
8	Up/Down % Decrease	Decreases the Up/Down percentage
9	Up/Down % Reset	Resets the Up/Down percentage
10	Reference Switch Bit 0	Used to select Reference 1 - 8
11	Reference Switch Bit 1	Used to select Reference 1 - 8
12	Ramp Select	Used to select Acceleration and Deceleration Rate 1 or 2
13	PID Enable	Enables and disables the PID controller. If no Hardware Enable is required, this configuration should not be selected
14	External Error	Used to generate an Error from an external condition
15	Drive Reset	Used to reset the drive from and Error condition
16	Run	Commands the drive to run
17	Reverse	Reverses the direction
18	Jog Forward	Jogs forward
19	Jog Reverse	Jogs reverse
20	Fire Mode	Commands the drive to run at the *Fire Mode Frequency* (**P2.27**), ignoring enable and run signals
21	Motor Pre-Heat	Apply pre-heat current without spinning the motor
22	Reference Switch Bit 2	Used to select Reference 1 - 8

P5.18 PID Negative Limit Enable

Range:	0 to 1	Default:	0 (Off)

Setting this parameter to On (1) allows *PID Percentage* (**P1.19**) to be negative which will allow the motor to rotate in the reverse direction.

7.3.6 Menu 6 - IO configuration

This menu contains parameters related to the setup of the drive inputs and outputs. To use an analog input or frequency input as a drive reference, the appropriate value should be set in a *Frequency Reference 1 Selector* (**P2.21**) or similar parameter.

P6.01	**T2 Analog Input 1 Type**		
Range:	0 to 6	Default:	3 (4 - 20 mA)

P6.02	**T4 Analog Input 2 Type**		
Range:	0 to 6	Default:	0 (0 – 10 V)

Defines the type of input.

Value	Input Type	Description
0	0-10 V	A voltage input where 0 V is 0 % and 10 V is 100 %
1	Digital	Enables the digital function for this analog input where 1 is detected at 8 V and above and a 0 is detected at 7 V and below
2	0-20 mA	A current input where 0 mA is 0 % and 20 mA is 100 %
3	4-20 mA No Alarm	A current input where 4 mA is 0 % and 20 mA is 100 %. No action taken if current < 3 mA
4	4-20 mA Hold	A current input where 4 mA is 0 % and 20 mA is 100 %. The value is held if current < 3 mA
5	4-20 mA Stop	A current input where 4 mA is 0 % and 20 mA is 100 %. The drive will stop if current < 3 mA and not restart
6	4-20 mA Error	A current input where 4 mA is 0 % and 20 mA is 100 %. An error is generated if current < 3 mA

The analog inputs can be set up as voltage or a current type as defined above with a resolution of 11 bits.

The analog inputs can also be used as digital inputs where the switching thresholds are at 7 V and 8 V. When used as a digital input the terminal does not sink or source current so if the input is not being driven, an appropriate pull up or pull down resistor must be fitted externally.

In 4-20 mA current input modes, a current input less than 3 mA is detected as a current loop loss which can be used to indicate a wire break.

NOTE The value of these parameters can be set by *Frequency Reference Configuration* (**P2.03**).

P6.03	**T6 Analog Output Type**		
Range:	0 to 2	Default:	2 (4 - 20 mA)

Defines the type of output.

Value	Output Type	Description
0	0-10 V	A voltage output where 0 % is 0 V and 100 % to 10 V
1	0-20 mA	A current output where 0 % is 0 mA and 100 % is 20 mA
2	4-20 mA	A current output where 0 % is 4 mA% and 100 % is 20 mA

The analog output can be set up as voltage or a current type as defined above. The absolute value of the chosen parameter is scaled such that 10 V or 20 mA is equivalent to the parameter's maximum value. It can be further scaled by *T6 Analog Output Scaling* (**P6.07**).

P6.04	**T11 Digital IO 1 Type**		
Range:	0 to 4	Default:	0 (Digital Input)

Defines the digital IO type for digital I/O 1.

Value	Type	Description
0	Digital Input	The low level input must be < 9 V and the high level input > 10 V
1	Digital Output	Positive logic digital output
2	Frequency Output	A frequency output between 1 Hz and 10 kHz
3	PWM Output	A PWM output running at 1 kHz
4	Digital Output Inverted	Positive logic digital output with the selected function inverted

As a Digital Output, the maximum source current is 50 mA (but 100 mA total limit on digital output, 24 V output and 485 port), and there is a 6 - 7 kΩ internal pull down resistor to 0 V which will sink some current.

As a Frequency Output, 10 kHz is equivalent to the maximum value of the output variable. This can be scaled using *T11 Frequency/ PWM Output Scaling* (**P6.11**). The resolution of the frequency output is 0.02 %.

As a PWM Output, the output frequency is fixed at 1 kHz and 100 % duty is equivalent to the maximum value of the output variable. This can be changed using *T11 Frequency/PWM Output Scaling* (**P6.11**). The resolution of the PWM output is 0.02 %. In this mode the output can be connected to an analog meter for monitoring purposes only as the PWM amplitude only has the accuracy of the 24 V output voltage. The output may require filtering before connecting to a meter if the meter used is responsive enough to pick up the 1 kHz output frequency.

NOTE The value of this parameter can be set by *Frequency Reference Configuration* (**P2.03**).

P6.05 T15 Digital Input 5 Type

Range:	0 to 1	Default:	0 (Digital Input)

Defines the input type for terminal 15, digital input 5.

Value	Type	Description
0	Digital Input	The low level input must be < 9 V and the high level input > 10 V
1	Frequency Input	Frequency input with a maximum frequency of 100 kHz. The low level input must be < 5 V and the high level input > 15 V

T

The frequency input can be scaled, limited and inverted using the associated scaling parameters as described by *T15 Frequency Input Minimum Input* (**P6.29**).

NOTE The value of this parameter can be set by *Frequency Reference Configuration* (**P2.03)**.

P6.06 T6 Analog Output Function Select

Range:	0 to 17	Default:	2 (Ramp Output)

Selects the output function that the analog output should represent.

Value	Output Function	Description
0	None	0 %
1	*Ramp Input* (**P1.13**)	The drive frequency reference before the ramps
2	*Ramp Output* (**P1.14**)	The drive frequency reference after the ramp has been applied
3	*Output Frequency* (**P1.01**)	The output frequency of the drive
4	*Output Current* (**P1.06**)	The magnitude of the output current
5	*Torque Producing Current* (**P1.07**)	The torque producing output current
6	*Output Voltage* (**P1.02**)	The output voltage
7	*DC Bus Voltage* (**P1.24**)	The D.C. bus voltage
8	*Analog 1 Percentage* (**P1.15**)	The value of analog 1 percentage
9	*Analog 2 Percentage* (**P1.16**)	The value of analog 2 percentage
10	*Frequency Input Percentage* (**P1.17**)	The value of the frequency input percentage
11	*Output Power* (**P1.03**)	The output power
12	*Motor RPM* (**P1.04**)	The motor RPM
13	*Percentage Load* (**P1.08**)	The percentage load
14	*PID Percentage* (**P1.19**)	The percentage output of the PID controller
15	*PID Error* (**P1.21**)	The error of the PID controller
16	*Motor Thermal %* (**P1.22**)	The thermal percentage to error level of the motor
17	*Drive Thermal %* (**P1.23**)	The thermal percentage to error level of the drive

Selects the parameter that the analog output should represent. The absolute of the chosen parameter is scaled such that 10 V or 20 mA is equivalent to the parameter's maximum value. It can be further scaled by *T6 Analog Output Scaling* (**P6.07**).

P6.07 T6 Analog Output Scaling

Range:	0.000 to 40.000	Default:	1.000

Defines the scaling factor for the analog output.

An automatic scaling takes place when parameters are selected for an analog output such that the analog output will be at full scale when the parameter value is at its maximum value. Some parameters do not reach their maximum values and so this parameter is provided for the user to apply further scaling and configure a bigger range of the analog output to be used.

If a scale set here causes the output to exceed 100 %, the output value is limited to 10 V or 20 mA.

P6.08	**T41-T43 Relay Function Select**		
Range:	0 to 11	Default:	7 (Drive Healthy)

Selects the drive state that controls the relay.

Value	Function	Description
0	Disabled	Always Off
1	Drive Running	On if the drive is running
2	At Speed	On if the output speed is within 1 Hz of the reference
3	At Zero	On if the output is within 2 Hz of 0 Hz
4	Under Voltage	On if the drive is in the under voltage state
5	External Error	On if the external error input has been set
6	Drive Ready	On if the drive is ready to run (not inhibited by a hardware enable input)
7	Drive Healthy	On if the drive is healthy (not in error) (active alarms do not make the drive unhealthy)
8	Current Limit Active	On if the drive is limiting the output current
9	Reverse Running	On if the drive is running in the reverse direction
10	An In Current Loss	On if an analog input current loss has been detected
11	Threshold Detector	On if the threshold detector is active

The relay has 3 terminals; normally open (T41), common (T42), and normally closed (T43).

If the function selected is at 0 (Off), the common is connected to the normally closed terminal. When the function selected is at 1 (On), the common is connected to the normally open terminal.

P6.09	**T11 Digital Output 1 Function Select**		
Range:	0 to 11	Default:	3 (At Zero)

Selects the drive state that controls the digital output signal.

See the list of drive state options in *T41-T43 Relay Function Select* (**P6.08**)

T11 Digital IO 1 Type (**P6.04**) must be set to Digital Output (1) or Digital Output Inverted (4) for this parameter to have an effect.

P6.10	**T11 Frequency/PWM Output Function Select**		
Range:	0 to 17	Default:	0 (None)

Selects the output function that Digital IO 1 should represent in Frequency or PWM output types.

See the list of output function options in *T6 Analog Output Function Select* (**P6.06**).

The absolute value of the chosen parameter is scaled such that maximum output is equivalent to the parameter's maximum value. It can be further scaled by *T11 Frequency/PWM Output Scaling* (**P6.11**). See *T11 Digital IO 1 Type* (**P6.04**) for setting the output type.

P6.11	**T11 Frequency/PWM Output Scaling**		
Range:	0.000 to 40.000	Default:	1.000

Defines the scaling factor for Digital IO 1 in *Frequency* (2) and *PWM* (3) types.

An automatic scaling takes place when parameters are selected for this output such that the output will be at full scale when the parameter value is at its maximum value. Some parameters do not reach their maximum values and so this parameter is provided for the user to apply further scaling.

P6.12	**Negative Logic (NPN Sensor) Select**		
Range:	0 to 1	Default:	0 (Positive Logic)

By default the digital inputs are Positive Logic inputs (sinking inputs) to suit PNP sensors. This parameter allows the digital inputs to be set to Negative Logic inputs (sourcing inputs) to suit NPN type sensors. When analog inputs are used as digital inputs, they do not source or sink current and the logic is not affected when this parameter is set. This parameter has no effect on the digital output or analog inputs.

P6.13	**Run/Stop Configuration**		
Range:	0 to 10	Default:	1 (Enable + RF + RR)

Defines how the digital inputs or keypad are used to run and stop the drive.

Value	Configuration	Description
0	Custom	The parameters in the table below have been changed from a standard configuration.
1	Enable + Run Forward + Run Reverse	Enable on T12, Run Forward on T13, Run Reverse on T14
2	Run Forward + Run Reverse (3 wire)	Run Permit on T12, Run Forward on T13, Run Reverse on T14
3	Enable + Run + Reverse	Enable on T12, Run on T13, Reverse on T14
4	Run + Reverse (3 wire)	Run Permit on T12, Run on T13, Reverse on T14
5	Run + Jog (3 wire)	Run Permit on T12, Run on T13, Jog Forward on T14
6	Run Forward + Run Reverse (2 wire)	Run Forward on T13, Run Reverse on T14
7	Run + Reverse (2 wire)	Run on T13, Reverse on T14
8	Keypad	Pressing Up and Down buttons together is run and pressing the Reset button is stop
9	Keypad with Enable	Pressing Up and Down buttons together is run and pressing the Reset button is stop, hardware enable required
10	Keypad Jog	Hold the Up and Down buttons together to jog the motor forward

This parameter allows quick setup of digital inputs 2 - 4 to control the hardware enable, run, direction and jog signals according to predefined configurations; as well as configuring the drive keypad for run and stop control.

For more detailed information and wiring diagrams showing the changes, see ***section 6.3 Running, stopping and controlling motor direction.***

The following assignments are made and saved after the configuration parameter has been edited. Anything marked as Not Changed is left at its current value. If a parameter in the table below is changed after it has been set here, this parameter is automatically set to Custom (0). If the configuration is set to Custom (0) there are no assignments made, allowing the user to set a configuration and then modify it as required.

	***Run/Stop Configuration* (P6.13)**										
	0	**1**	**2**	**3**	**4**	**5**	**6**	**7**	**8**	**9**	**10**
T12 Digital Input 2 Function Select (**P6.17**)	-	1	4	1	4	4	0	0	0	1	0
T13 Digital Input 3 Function Select (**P6.18**)	-	2	2	16	16	16	2	16	0	0	0
T14 Digital Input 4 Function Select (**P6.19**)	-	3	3	17	17	18	3	17	0	0	0
Keypad Run and Stop Function Select (**P4.07**)	-	0	0	0	0	0	0	0	1	1	2

"-" indicates that the configuration will not change the setting of the parameter from the current value.

P6.14	**T2 Analog Input 1 Digital Function Select**		
Range:	0 to 22	Default:	0 (None)
P6.15	**T4 Analog Input 2 Digital Function Select**		
Range:	0 to 22	Default:	0 (None)
P6.16	**T11 Digital Input 1 Function Select**		
Range:	0 to 22	Default:	0 (None)
P6.17	**T12 Digital Input 2 Function Select**		
Range:	0 to 22	Default:	1 (Hardware Enable)
P6.18	**T13 Digital Input 3 Function Select**		
Range:	0 to 22	Default:	2 (Run Forward)
P6.19	**T14 Digital Input 4 Function Select**		
Range:	0 to 22	Default:	3 (Run Reverse)

P6.20	**T15 Digital Input 5 Function Select**		
Range:	0 to 22	Default:	10 (Reference Switch Bit 0)

Selects the digital input function of the selected control terminal if it is in digital input mode.

Value	Function	Description
0	None	No Digital Function
1	Hardware Enable	If selected, is used to enable or disable the drive
2	Run Forward	Commands the drive to run forward
3	Run Reverse	Commands the drive to run reverse
4	Run Permit (Not Stop)	Permits a Run signal when set, resets any run latch when clear (enables latching when selected as a function)
5	Forward Limit Switch	Prevents a run in the forward direction
6	Reverse Limit Switch	Prevents a run in the reverse direction
7	Up/Down % Increase	Increases the Up/Down percentage
8	Up/Down % Decrease	Decreases the Up/Down percentage
9	Up/Down % Reset	Resets the Up/Down percentage
10	Reference Switch Bit 0	Used to select Reference 1 - 8
11	Reference Switch Bit 1	Used to select Reference 1 - 8
12	Ramp Select	Used to select Acceleration and Deceleration Rate 1 or 2
13	PID Enable	Enables and disables the PID controller. If no Hardware Enable is required, this configuration should not be selected
14	External Error	Used to generate an Error from an external condition
15	Drive Reset	Used to reset the drive from an error condition
16	Run	Commands the drive to run
17	Reverse	Reverses the direction
18	Jog Forward	Commands the drive to jog forward
19	Jog Reverse	Commands the drive to jog reverse
20	Fire Mode	Commands the drive to run at the Fire Mode Reference, ignoring enable and run signals. See Fire Mode Reference parameter for more information
21	Motor Pre-Heat	Apply pre-heat current without spinning the motor
22	Reference Switch Bit 2	Used to select Reference 1 - 8

Notes on function selection:

- Selecting the *Run Permit (Not Stop)* function (4) automatically enables a latch on the Run inputs (*Run Forward, Run Reverse,* and *Run*), see *Run & Direction Indicators* (**P1.12**). Providing the *Run Permit* input is active, activation of the Run inputs is latched so that a momentary switch can be used to start the drive. When *Run Permit* is made inactive (Stop), all latches are cleared, and no Run signal is accepted.
- If *Run Forward* or *Run Reverse* is made active, the Reverse function will be ignored i.e. explicit *Run Forward* and *Run Reverse* signals override the direction selection.
- A Run signal overrides a Jog signal.

NOTE The value of these parameters can be set by *Run/Stop Configuration* (**P6.13**).

For more detailed information and wiring diagrams refer to **section 6.3 *Running, stopping and controlling motor direction***

P6.21	**T2 Analog Input 1 Minimum Input**		
Range:	0.00 to 100.00 %	Default:	0.00 %

P6.22	**T2 Analog Input 1 Percentage at Minimum Input**		
Range:	-100.00 to 100.00 %	Default:	0.00 %

P6.23	**T2 Analog Input 1 Maximum Input**		
Range:	0.00 to 100.00 %	Default:	100.00 %

P6.24	**T2 Analog Input 1 Percentage at Maximum Input**		
Range:	-100.00 to 100.00 %	Default:	100.00 %

These parameters define the scaling of analog input 1 and can be used to limit the range, offset, invert and scale the input value.

The parameters define two points to scale how the drive interprets the measured input as below.

Figure 7-18 Scaling

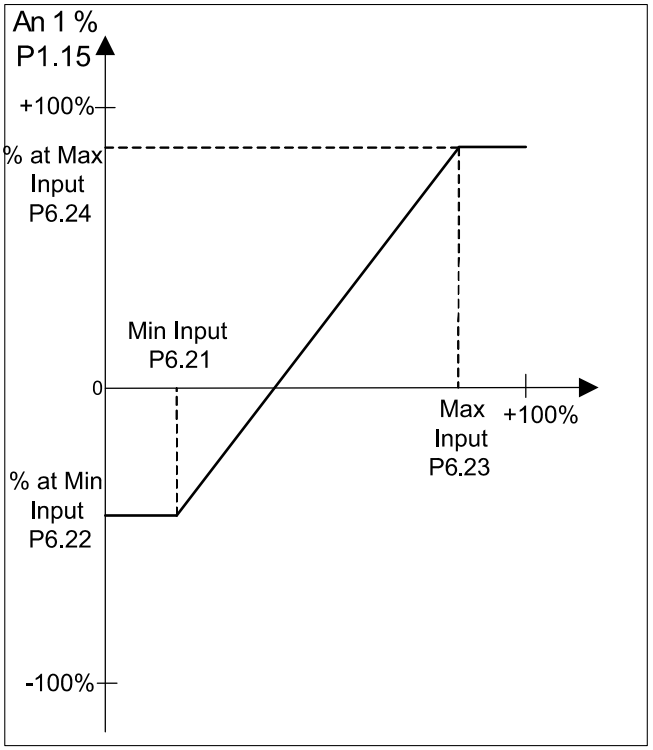

Limiting the input range

Set P6.21 and P6.23 to the required range. If the input level is at or below the level set in P6.21, the value of *T2 Analog Input 1 Percentage* (**P1.15**) is equal to P6.22. If the level is at or above P6.23, the value of P1.15 is equal to P6.24.

Offset

Use P6.22 to offset the value of analog input 1 Percent.

Inverting the input

To invert the input so that the value of P1.15 decreases as the input on T2 increases, Set P6.22 to 100.00 % and P6.24 to 0.00 %.

Example:

If 5 V on the input should equal 0 % of *T2 Analog Input 1 Percentage* (**P1.15**), P6.21 should be set to 50 %. If the analog input is selected as a reference, 0 V to 5 V would equal a reference of 0 Hz, 6 V would equal a reference of 10 Hz, and 10 V = 50 Hz.

If *T2 Analog Input 1 Minimum Input* (**P6.21**) ≥ *T2 Analog Input 1 Maximum Input* (**P6.23**) then *T2 Analog Input 1 Percentage* (**P1.15**) = 0.00 % whatever the input level.

P6.25	**T4 Analog Input 2 Minimum Input**		
Range:	0.00 to 100.00 %	Default:	0.00 %
P6.26	**T4 Analog Input 2 Percentage at Minimum Input**		
Range:	-100.00 to 100.00 %	Default:	0.00 %
P6.27	**T4 Analog Input 2 Maximum Input**		
Range:	0.00 to 100.00 %	Default:	100.00 %
P6.28	**T4 Analog Input 2 Percentage at Maximum Input**		
Range:	-100.00 to 100.00 %	Default:	100.00 %

These scaling parameters apply to T4 analog input 2. See the description below *T2 Analog Input 1 Minimum Input* (**P6.21**).

P6.29	**T15 Frequency Input Minimum Input**		
Range:	0.00 to 100.00 %	Default:	0.00 %
P6.30	**T15 Frequency Input Percentage at Minimum Input**		
Range:	-100.00 to 100.00 %	Default:	0.00 %
P6.31	**T15 Frequency Input Maximum Input**		
Range:	0.00 to 100.00 %	Default:	100.00 %

P6.32	**T15 Frequency Input Percentage at Maximum Input**		
Range:	-100.00 to 100.00 %	Default:	100.00 %
These scaling parameters apply to T15 Frequency Input. See the description below *T2 Analog Input 1 Minimum Input* (**P6.21**).			

8 Communications

This chapter describes how an external controller, such as a PLC or industrial PLC, can be used to interface with the Commander S. The Commander S supports MODBUS RTU, a serial communications protocol that allows a controller to request and send data between connected devices.

The number of drives that can be connected on the same network work depends on the capacity of the network. Each Commander S has a 1.125 unit load so if the network can support a unit load of 30, 26 drives can be connected. Each device on the network must be assigned a unique address so that the correct device processes and responds to the correct message.

Figure 8-1 System configuration

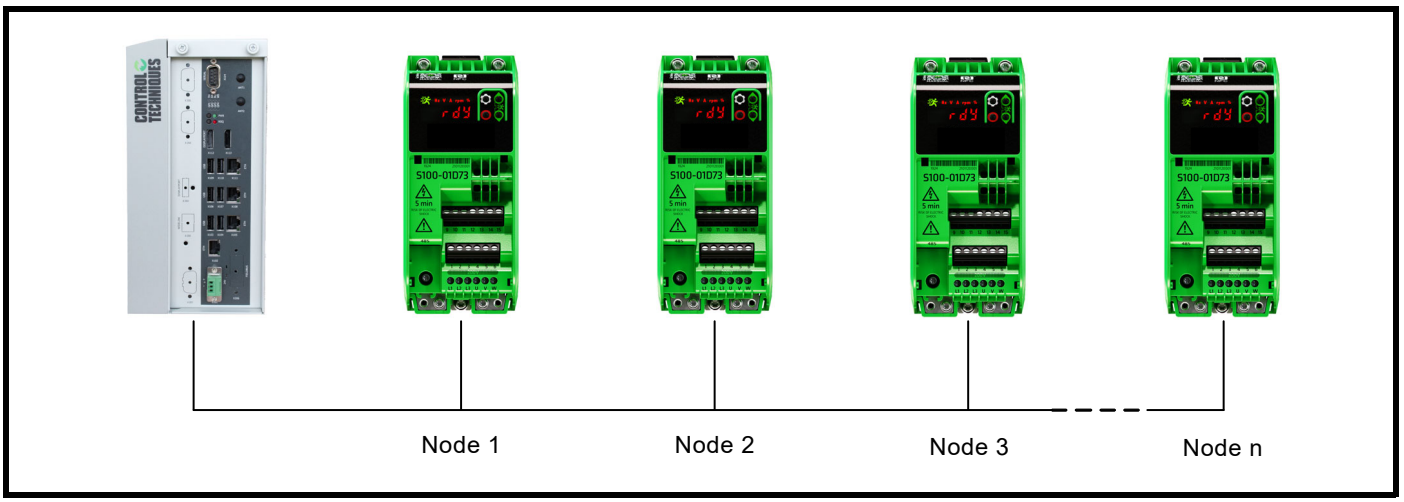

For details on the cable and hardware connections, see section 4.9 *Communication connections*.

8.1 Control Techniques MODBUS RTU specification

This section describes the adaptation of the MODBUS RTU protocol offered on Control Techniques' products. The portable software class which implements this protocol is also defined.

MODBUS RTU is a master slave system with half-duplex message exchange. The Control Techniques (CT) implementation supports the core function codes to read and write registers. A scheme to map between MODBUS registers and CT parameters is defined in this section.

8.1.1 MODBUS RTU

Table 8-1 Physical layer

Attribute	Description
Normal physical layer for multi-drop operation	EIA485 2 wire
Bit stream	Standard UART asynchronous symbols with Non Return to Zero (NRZ)
Symbol	Each symbol consists of:- 1 start bit 8 data bits (transmitted least significant bit first) 2 stop bits*
Baud rates	600, 1200, 2400, 4800, 9600, 19200, 38400, 57600, 76800, 115200

*The drive will accept a packet with 1 or 2 stop bits but will always transmit 2 stop bits

RTU Frame

MODBUS works by the client (PLC, controller) sending a request message and the server (the drive) replying with a response message. The MODBUS message has a format known as the RTU frame. For a request message the frame contains the node address of the server the request is intended for; the function code that instructs the server what to do (read/write etc); the message data; and the Cyclic Redundancy Check (CRC) to ensure the message has not been corrupted during transmission.

Table 8-2 shows the RTU frame (in hex) of two client request messages, the first shows a frame to read parameter *Error* (**P1.29**) and the second shows a write of 500 (50.0 Hz) to parameter *Preset Frequency 1* (**P2.16**). Further information of each section of the RTU frame can be found in this chapter.

Table 8-2 RTU Frame

Byte	0	1	2 to n	n + 1	n + 2
Description	Server node address	Function code	Message data	CRC LSB	CRC MSB
Read Example (0x)	01	03	00 80 00 01	85	E2
Write Example (0x)	01	06	00 D7 01 F4	39	E5

Each frame is terminated with a minimum silent period of 3.5-character times or 1.75 ms (whichever is largest). The silent period will vary with the selected baud rate, as the time it takes to send 1-character (11 bits) changes. For 19200 baud, 3.5-character times and therefore the minimum silent period is 2 ms.

Nodes use the terminating silence period to detect the end of frame and begin frame processing. All frames must therefore be transmitted as a continuous stream without any gaps greater or equal to the silence period. If an erroneous gap is inserted, then receiving nodes may start frame processing early in which case the CRC will fail, and the frame will be discarded.

MODBUS RTU is a client-server system. All client requests, except broadcast requests, will result in a response to the addressed server. The server will respond (i.e. start transmitting the response) 1 ms after the end of the frame has been detected. If the client is not ready to receive data within 1 ms of the drive receiving the message, set *Minimum Serial Comms Transmit Delay* (**P4.06**) to delay the drives response up to a maximum of 250 ms. The minimum server response time will never be less than the minimum silent period defined by 3.5-character times.

If the client request was a broadcast request, then the client may transmit a new request once the maximum server response time has expired.

The client must implement a message time out to handle transmission errors. This time out period must be set to the maximum server response time + transmission time for the response.

Figure 8-2 Frame processing

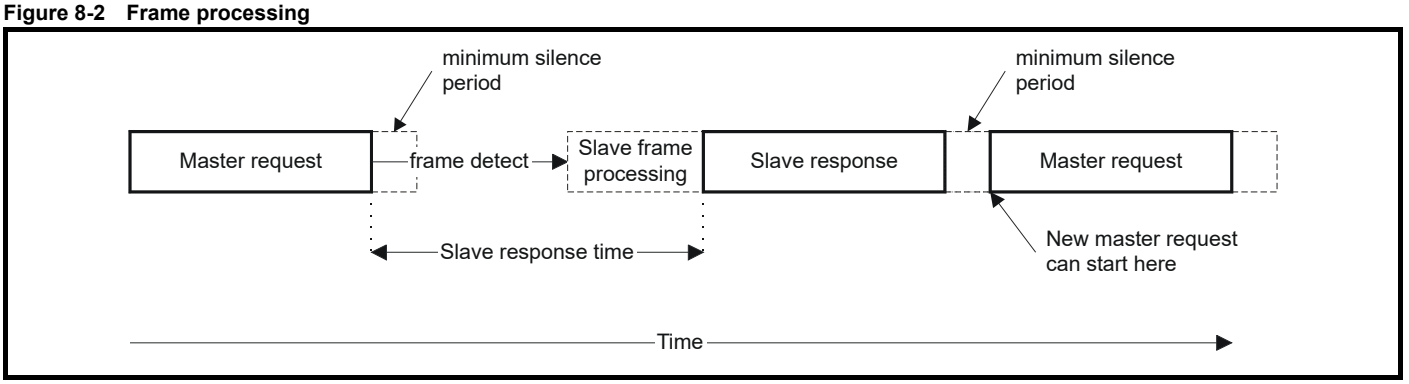

8.1.2 Slave node address

The first byte of the frame is the server node address. Valid server node addresses are 1 through 247 (decimal) and can be set in the drive by *Serial Node Address* (**P4.03**).

In the client request this byte indicates the target server node; in the server response this byte indicates the address of the server sending the response.

Broadcast request messages

The client can address all servers on a network using address zero to send a broadcast request. The servers will not respond to broadcast requests.

8.1.3 Function codes

The function code determines the context and format of the message data. Bit-7 of the function code is used in the server response to indicate an exception.
The following function codes are supported:

Code		Description
Decimal	**Hexadecimal (0x)**	
3	03	Read multiple 16-bit registers
6	06	Write single register
16	10	Write multiple 16-bit registers
23	17	Read and wrote multiple 16-bit registers
43	2B	Read Device Identification

If the server is unable to interpret the request it will respond with the function code with bit 7 set to 1 and an exception code. For example function code 03 (0000 0011) with an exception will return a function code of 83 (1000 0011). For details on the exception codes see section 8.1.5 *CRC*.

8.1.4 Message data

The selected function code will define the contents of the message. For read requests, the message data consists of the drive start parameter and the number of parameters to access; for a write command, the message data consists of the drive start parameter, parameter data values and the number of parameters to write.

Commander S parameters are all 16-bits and each parameter value is stored in a single MODBUS registers. The MODBUS protocol specification defines registers as 16-bit signed integers. To access the correct drive parameter, the client must reference the correct MODBUS register, the Control Techniques MODBUS RTU implementation maps the MODBUS register address to drive parameters using the format:

m x 100 + pp - 1

where m is the drive menu number and pp is the parameter number within the drive menu, as shown in Table 8-3.

Table 8-3 Converting drive parameter number to MODBUS register number

Parameter	MODBUS register	
	Decimal	**Hex (0x)**
m.pp	m x 100 + pp -1	
P1.04	103	00 67
P2.20	219	00 DB
P4.19	418	01 A2

FC03 Read multiple

The client can use this function code to request a read of up to 16 sequential parameters. If the client requests a read of more than 16 parameters, the server will issue an exception code 2. When using this code the client must specify the starting parameter (using the MODBUS register) and the total number of parameters the server should respond with. Table 8-5 shows an example of reading *Output Frequency* (**P1.01**), *Output Voltage* (**P1.02**), *Output Power* (**P1.03**), *Motor RPM* (**P1.04**) and *Drive State* (**P1.05**).

Table 8-4 FC03 Request and response

Byte	Client Request		Server Response		
	Description	Example (0x)	Description	Example (0x)	Interpretation
0	Server node address	01	Server node address	01	Responding node address 01
1	Function code	03	Function code	03	Response to read multiple request
2	Start register MSB	00	Length of register data (in bytes)	0A	0A (hex) = 10 (decimal) Therefore, the server is responding with 10 bytes of data
3	Start register LSB	64	Register data (**P1.01** MSB)	00	00 32 (hex) = 50 (decimal) Therefore, P1.01 = 5.0 Hz
4	Number of 16-bit registers MSB	00	Register data (**P1.01** LSB)	32	
5	Number of 16-bit registers LSB	05	Register data (**P1.02** MSB)	00	00 1C (hex) = 28 (decimal) Therefore, P1.02 = 28 V
6	CRC LSB	C4	Register data (**P1.02** LSB)	1C	
7	CRC MSB	16	Register data (**P1.03** MSB)	00	00 00 (hex) = 0 (decimal) Therefore, P1.03 = 0.00 kW
8			Register data (**P1.03** LSB)	00	
9			Register data (**P1.04** MSB)	00	00 96 (hex) = 150 (decimal) Therefore, P1.04 = 150 rpm
10			Register data (**P1.04** LSB)	96	
11			Register data (**P1.05** MSB)	00	00 04 (hex) = 4 (decimal) Therefore, P1.05 = Running (4)
12			Register data (**P1.05** LSB)	04	
13			CRC LSB	55	See details in section 8.1.10 *CRC*
14			CRC MSB	F9	

FC06 Write single register

The client can use this function code to write a value to a single parameter. The server will respond with an echo of the request, returned after the data has been written. Table 8-5 shows an example of writing to the *Binary Control Word* (**P4.18**).

NOTE

Once the control word has been enabled with bit 15, it must continue to be written to once a second to prevent a *Watchdog Error* (E030).

Table 8-5 FC06 Request and response

Byte	Client Request			Server Response	
	Description	Example (0x)	Interpretation	Description	Example (0x)
0	Server node address	01	Target node address 01	Server node address	01
1	Function code	06	Response to write single request	Function code	06
2	Start register MSB	01	01 A1 (hex) = 417 (decimal) 417 MODBUS register = Binary Control Word (**P4.18**)	Start register MSB	01
3	Start register LSB	A1		Start register LSB	A1
4	Register data (**P4.18** MSB)	80	This is a basic control word command to run the drive: 80 21 (hex) = 1000 0000 0010 0001 (binary) bit 15 =Enable Control Word bit 5 = Run bit 0 = Software Enable	Register data (**P4.18** MSB)	80
5	Register data (**P4.18** LSB)	21		Register data (**P4.18** LSB)	21
6	CRC LSB	78	See details in section 8.1.5 *CRC*	CRC LSB	78
7	CRC MSB	0C		CRC MSB	0C

FC16 Write multiple

The client can use this function code to write data to up to 16 sequential parameters. If the client tries to write to more than 16 parameters, the server will issue an exception code 2. Table 8-6 shows an example of writing to the *Preset Frequency parameters* (**P2.16** to **P2.19**).

Table 8-6 FC16 Request and response

Byte	Client Request			Server Response	
	Description	Example (0x)	Interpretation	Description	Example (0x)
0	Server node address	01	Target node address 01	Server node address	01
1	Function code	10	Write multiple parameters	Function code	03
2	Start register MSB	00	00 D7 (hex) = 215 (decimal) 215 MODBUS register = Preset Frequency 1 (**P2.16**)	Start register MSB	00
3	Start register LSB	D7		Start register LSB	D7
4	Number of 16-bit registers MSB	00	Write to 4 parameters	Number of 16-bit registers MSB	00
5	Number of 16-bit registers LSB	04		Number of 16-bit registers LSB	04
6	Length of register data (in bytes)	08	Four 16-bit parameters = 8 bytes of data to send	CRC LSB	71
7	Register data MSB	00	Write 200 (20.0 Hz) to start register (**P2.16**)	CRC MSB	F2
8	Register data LSB	C8			
9	Register data MSB	01	Write 300 (30.0 Hz) to the next register (**P2.17**)		
10	Register data LSB	2C			
11	Register data MSB	01	Write 400 (40.0 Hz) to the next register (**P2.18**)		
12	Register data LSB	90			
13	Register data MSB	01	Write 500 (50.0 Hz) to the next register (**P2.19**)		
14	Register data LSB	F4			
15	CRC LSB	59	See details in section 8.1.5 *CRC*		
16	CRC MSB	12			

FC23 Read/Write multiple

The client can use this function code to read up to 16 sequential parameters and write data to up to 16 sequential parameters in one message. The server imposes an upper limit on the number of registers which can be written. If this is exceeded the server will discard the request and the client will time out.

Table 8-7 FC23 Request and response

Byte	Client Request			Server Response	
	Description	Example (0x)	Interpretation	Description	Example* (0x)
0	Server node address	01	Target node address 01	Server node address	01
1	Function code	17	Read and write multiple parameters	Function code	17
2	Start register to read MSB	00	00 64 (hex) = 100 (decimal) 100 MODBUS register = (**P1.01**)	Length of register data (in bytes)	0A
3	Start register to read LSB	64		Register data (**P1.01** MSB)	00
4	Number of 16-bit registers to read MSB	00	Read 5 parameters (**P1.01** to **P1.05**)	Register data (**P1.01** LSB)	32
5	Number of 16-bit registers to read LSB	05		Register data (**P1.02** MSB)	00
6	Start register to write MSB	01	01 A1 (hex) = 417 (decimal) 417 MODBUS register = (**P4.18**)	Register data (**P1.02** LSB)	1C
7	Start register to write LSB	A1		Register data (**P1.03** MSB)	00
8	Number of 16-bit registers to write MSB	00	Writing to one parameter	Register data (**P1.03** LSB)	00
9	Number of 16-bit registers to write LSB	01		Register data (**P1.04** MSB)	00
10	Length of register data (in bytes)	02	One 16-bit parameter = 2 bytes of data	Register data (**P1.04** LSB)	96
11	Register data MSB	80	This is a basic control word command to run the drive: 80 21 (hex) = 1000 0000 0010 0001 (binary) bit 15 =Enable Control Word bit 5 = Run bit 0 = Software Enable	Register data (**P1.05** MSB)	00
12	Register data LSB	21		Register data (**P1.05** LSB)	04
13	CRC LSB	BF	See details in section 8.1.5 *CRC*	CRC LSB	65
24	CRC MSB	5F		CRC MSB	C9

*For the interpretation of the response message see Table 8-4.

FC43 Read Device Identification

Allows the user to read drive identification and additional information relative to the physical and functional description of a remote drive over the RTU serial interface.

This function code uses the MEI (Modbus Encapsulated Interface) transport mechanism type 14 (0x0E), reserved for Device Identification.

Both the mandatory (Basic) and optional (Regular) identification modes (0x01 and 0x02 respectively) are supported, the Basic mode returns the first three identification objects, Vendor name, Product code and Major/minor revision; and the optional (Regular) mode returns the identification objects Vendor URL, Product name, Model name and Application name.

The supported identification objects and values are shown in the following table.

Table 8-8 Supported identification objects

Object Number	Object name	Object ID	Value
1	Vendor Name	0x00	Control Techniques
2	Product code	0x01	S100-FFVCA
3	Major/minor revision	0x02	Vaabbccdd
4	Vendor URL	0x03	controltechniques.com
5	Product name	0x04	Commander
6	Model name	0x05	S100
7	Application name	0x06	(Set in Marshal)

Product code

The product code information is comprised as:

[Model name]-[FFVCA]

Where:

- Model name is S100
- F is the frame size (2 digits)
- V is the voltage rating (1 digit)
- C is the current rating step (1 digit)
- A is the internal EMC filter rating (1 = C1, 3 = C3)

For example, a frame 1, 200 Volt, 1.4 Amp, S100 with C3 filter product code will be:

S100-01213

The format of the client request is shown in the following table.

Table 8-9 Client request

Byte	Description	
0	Server node address	
1	Modbus Function Code (0x2B)	
2	MEI Type (0x0E)	
3	Read Device ID Code	(0x01): Basic identification (mandatory) (0x02): Regular identification (optional)
4	Starting Object ID (0x00)	
5	CRC LSB	(0x70): Basic identification (0x70): Regular identification
6	CRC MSB	(0x77): Basic identification (0x87): Regular identification

If the master request is valid, the slave will respond with the requested information using the following format.

Table 8-10 Server response

Byte	Description	
0	Server node address	
1	Modbus Function Code (0x2B)	
2	MEI Type (0x0E)	
3	Read Device ID Code	(0x01): Basic identification (mandatory) (0x02): Regular identification (optional)
4	Conformity level	(0x01): Basic identification (mandatory) (0x02): Regular identification (optional)
5	More follows (0x00)	
6	Next object ID (0x00)	
7	Number of objects in list	(0x03): Basic identification (mandatory) (0x04): Regular identification (optional)
List of enumerated objects		
n1	Object ID	
n[1] + 1	Object length (bytes)	
n[1] + 2	Object value start byte	
66	CRC LSB	
67	CRC MSB	

The Object ID, length and value are returned for each object in the list.

[1] - The value of n is dependent on the number of the object in the list and the previous object length, with the first object numbered 1.

The byte number, n (starting at 0) for each object is shown in the following table.

Table 8-11 Returned object's attributes bytes

Object			Return Byte		
Number	**Name**	**ID**	**ID**	**Length**	**Value**
Basic identification (mandatory)					
1	Vendor name	0x00	8	9	10
2	Product code	0x01	28	29	30
3	Major/minor revision	0x02	55	56	57
Regular identification (optional)					
4	Vendor URL	0x03	8	9	10
5	Product name	0x04	31	32	33
6	Model name	0x05	42	43	44
7	Application name	0x06	48	49	50

8.1.5 CRC

The CRC is a 16-bit cyclic redundancy check to ensure the message has not been corrupted during transmission. When a message is received by the client or the server, the device will calculate the CRC based on all bytes in the frame and ensure this matches the CRC of the message. The CRC for the Commander S uses the standard CRC-16 polynomial x16 + x15 + x2 + 1. The 16-bit CRC is appended to the message and transmitted LSB first.

8.1.6 Data encoding

MODBUS RTU uses a 'big-endian' representation for addresses and data items (except the CRC, which is 'little-endian'). This means that when a data value larger than a single byte is transmitted, the MOST significant byte is sent first. So for example

16 - bits 0x1234 would be transmitted in the order 0x12 0x34

8.1.7 Exceptions

The server will respond with an exception response if an error is detected in the client request. If a message is corrupted and the frame is not received, or the CRC fails then the server will not issue an exception. In this case the client device will time out. If a write multiple (FC16 or FC23) request exceeds the server maximum buffer size (of 16 parameters) then the server will discard the message. No exception will be transmitted in this case and the client will time out.

Exception message format

The server exception message has the following format:

Byte	Description
0	Responding server node address
1	Function code with bit 7 set
2	Exception code
3	CRC LSB
4	CRC MSB

Exception codes

The following exception codes are supported:

Byte	Description
1	Function code not supported
2	Register address out of range, or request to read too many registers. Can occur from FC43 if the MODBUS encapsulated interface ID is not supported.
4	Unrecoverable error

Parameter over range during block write FC16

The server processes the write block in the order the data is received. If a write fails due to an out of range value then the write block is terminated. However, the server does not raise an exception response, rather the error condition is signalled to the client by the number of successful writes field in the response.

Parameter over range during block read/write FC23

There will be no indication that there has been a value out of range during a FC23 access.

8.1.8 Parameter value notation

The Commander S parameters can range from 1-bit to 16-bit, this gives a maximum possible range of -32768 to 32767 for signed values. Values are transferred in two's compliment notation, so positive values will have the most significant bit set to 0 and negative values with have the most significant bit set to 1.

To interpret a negative response, convert the hex value to binary, invert all of the bits then add 1, then if required convert to decimal.

To send a negative value, convert the modulus of the value to binary, invert all 16-bits, then add 1, then send as hex.

Table 8-12 Parameter value notation

Decimal Value	Binary Value	Hexadecimal Value (0x)
-32768	1000 0000 0000 0000	80 00
-500	1111 1110 0000 1100	FE 0C
-1	1111 1111 1111 1111	FF FF
0	0000 0000 0000 0000	00 00
1	0000 0000 0000 0001	00 01
500	0000 0001 1111 0100	01 F4
32767	0111 1111 1111 1111	7F FF

MODBUS only uses raw data values so it is important to consider the number of decimal places of the target parameter has when sending data values. To set *Preset Frequency* 1 (**P2.16**) to 50.0 Hz, the client must send a value of 500 as shown in the example in Table 8-7.

8.2 Controlling the motor with MODBUS

If the drive is to be controlled via MODBUS, the first step is to enter the motor details. To set these details via the keypad or another interface refer to section 6.1 Basic setup. Alternatively, use FC16 to set P3.01 to P3.04 with the values from the motor nameplate.

Table 8-13 Motor setup with MODBUS

Frame (0x)	01	10	01	2C	00	04	08	00	8C	05	78	00	E6	00	46	A8	C6
Description	Server node address	Function code 16	Starting at P3.01		Writing to 4 registers		Sending 8 bytes of data	Motor Rated Current (1.40 A)		Motor Rated Speed (1400 rpm)		Motor Rated Voltage (230 V)		Motor Rated Power Factor (0.70)		CRC	

When parameter values are set with MODBUS they are not automatically saved and would return to their previous values following a power cycle. Perform a save by writing 1 to *Save Parameter* (**P4.19**).

Table 8-14 Perform a save with MODBUS

Frame (0x)	01	06	01	A2	00	01	E8	14
Description	Server node address	Function code 06	Set P4.19		Write 1		CRC	

Controlling the motor speed with MODBUS

To control the motor speed via MODBUS, set *Frequency Reference Configuration* (**P2.03**) to Presets (4). The client can then set the speed reference by writing to *Preset Frequency 1* (**P2.16**) using FC06.

Table 8-15 Setting Preset Frequency 1 with MODBUS

Frame (0x)	01	06	00	D7	01	90	38	0E
Description	Server node address	Function code 06	Set P2.16		Preset Frequency (40.0 Hz)		CRC	

Running and stopping the drive with MODBUS

To run and stop the motor with MODBUS, use the *Binary Control Word* (**P4.18**). Once enabled, the binary control word must continually be written to once a second to prevent a watchdog error (E030).

Table 8-16 Binary Control Word (P4.18)

Bit	**Function**	**Description**
Bit 0	Software Enable	Set to 1 to enable the drive
Bit 1	Run Forward	Set to 1 to run forwards
Bit 2	Jog Forward	Set to 1 to jog forwards
Bit 3	Run Reverse	Set to 1 to run in the reverse direction
Bit 4	Reverse	Set to 1 to reverse the direction
Bit 5	Run	Set to 1 to run
Bit 6	Run Permit (Not Stop)	Set to 1 to enable latching which will be cleared when set to 0
Bit 7	Reference Switch Bit 0	Used to select which reference is used by the reference system
Bit 8	Reference Switch Bit 1	Used to select which reference is used by the reference system
Bit 9	Jog Reverse	Set to 1 to jog in the reverse direction
Bit 10	Ramp Rate Selector	Used to select which ramp rates are used by the ramp system
Bit 11	Extend Timeout	Set to 1 to extend the watchdog timeout from 1 second to 60 seconds
Bit 12	Initiate Error	Set to 1 to repeatedly initiate the Control Word error (E035)
Bit 13	Reset Drive	Set to 1 to reset the drive, clearing errors. This is automatically cleared
Bit 14	Reserved	Not used by the drive
Bit 15	Enable Control Word	Set to 1 to enable the binary control word

Table 8-17 Run forward with MODBUS

Frame (0x)	01	06	01	A1	80	03	F8	15
Description	Server node address	Function code 06	Set P4.18		Bit 15 = 1 Bit 1 = 1 Bit 0 = 1		CRC	

Table 8-18 Run reverse with MODBUS

Frame (0x)	01	06	01	A1	80	09	78	12
Description	Server node address	Function code 06	Set P4.18		Bit 15 = 1 Bit 3 = 1 Bit 0 = 1		CRC	

Table 8-19 Stopping with MODBUS

This will keep the drive enabled but removes any run signals. The drive will decelerate the motor using the mode defined by *Stopping Mode Selector* (**P2.04**).

Frame (0x)	01	06	01	A1	80	01	79	D4
Description	Server node address	Function code 06	Set P4.18		Bit 15 = 1 Bit 0 = 1		CRC	

Table 8-20 Disable control word to prevent watchdog error (E030) with MODBUS

Frame (0x)	01	06	01	A1	00	00	D9	D4
Description	Server node address	Function code 06	Set P4.18		All bits = 0		CRC	

9 Diagnostics

The keypad display on the drive gives various information about the status of the drive and a full list of these indicators can be found in chapter 5.0 Getting Started. This chapter provides information on the following display indicators:

Alarms

Errors

9.1 Alarms

The drive will produce an alarm under certain conditions to warn the user of a potential fault condition. The drive will continue to run in an alarm condition, but some alarms will advance to an error if the cause is not removed.

Table 9-1 Drive Alarms

Alarm	Description
A0	**Motor Overload**
	Motor Thermal Percentage (**P1.22**) is larger than 75 % and the current magnitude is larger than the motor rated value. **Recommended Actions:** • Reduce the load on the motor • Check for a jammed motor shaft
A1	**Drive Overload**
	Drive Thermal Percentage (**P1.23**) is > 95 %. The alarm will be cleared when *Drive Thermal* Percentage (**P1.23)** is < 75 %. **Recommended Actions:** • Reduce load on motor or ambient temperature of the drive.
A2	**Auto-tune Active**
	Will be reset when auto-tune complete.
A3	**Limit Switch Active**
	A digital input has been configured as a limit switch and is active. **Recommended Actions:** • Rotate the motor away from the limit switch. See *Sequencer Input and Output Indicators* (**P1.11**) and *Digital IO Indicators* (**P1.25**).
A4	**Supply Phase Loss or Imbalance**
	The drive has detected a supply phase loss or a large imbalance between the phases. **Recommended Actions:** • Check supply fuses to the drive • Check the voltage on each phase is equal
A5	**Analog Input Current Loop Loss**
	The input current of an analog input (T2 or T4) has fallen below 3 mA. See *Analog Input 1 Type* (**P6.01**). **Recommended Actions:** • Check current loop master is powered • Check the integrity of the wiring
A6	**Current Limit Active**
	The drive is at its current limit**.** **Recommended Actions:** Increase time set in *Acceleration Rate 1* (**P2.06**) Reduce the load on the motor
A7	**I/O Overload**
	The current demand on the drive 24 V circuit has exceeded 100 mA. **Recommended Actions:** • Check 24 V output, digital output and 485 port for a current overload condition or potential short

9.2 Errors

An error is produced as a response to certain conditions detected by the drive either to protect the motor or protect the drive. When an error does occur, it is shown on the display by an error code starting with an "E" (for example E006) and the error code is stored in *Error* (**P1.29**). The value of three status or monitoring parameters can be stored when an error occurs, see *Parameter 1 Save on Error Selector* (**P4.09**).

The drive is configured by default to avoid errors and take action (such as limiting output current) or raise an alarm to prevent the interruption to an operation. If an error does occur it could be sign of a greater problem and should not be ignored.

CAUTION

Once the cause of the error has been addressed and it is safe to restart the motor, use the Reset button ○ to remove the error.

WARNING

Users must not attempt to repair a drive if it is faulty, nor carry out drive fault diagnosis other than through the use of the diagnostic features described in this chapter or within Marshal. If a drive is faulty, it must be returned to an authorized Control Techniques distributor for repair.

Marshal contains a diagnostic tool to help troubleshoot drive commissioning and operation. This includes guidance even if the drive does not display an error.

<table>
<tr><th>Error</th><th>Diagnosis</th></tr>
<tr><td>E000</td><td>None</td></tr>
<tr><td></td><td>No error</td></tr>
<tr><td>E001</td><td>DC Over Voltage</td></tr>
<tr><td></td><td>The D.C. bus voltage has exceeded the maximum D.C. bus voltage. The error is caused when either the Instant Threshold has been exceeded or Delay Threshold has been exceeded for 15 s. These thresholds vary depending on the voltage rating of the drive as shown below.
<table>
<tr><th>Voltage rating</th><th>Instant Threshold</th><th>Delay Threshold</th></tr>
<tr><td>110 V</td><td>415 V</td><td>400 V</td></tr>
<tr><td>200 V</td><td>415 V</td><td>400 V</td></tr>
<tr><td>400 V</td><td>830 V</td><td>800 V</td></tr>
</table>
Recommended actions:
• Increase deceleration ramp rate parameter values in Deceleration Rate 1 (P2.07) and Deceleration Rate 2 (P2.09)
• Consider enabling S-Ramps (P2.05) if the problem occurs at the start of deceleration. Consider reducing Standard Ramp Voltage (P2.12) if seen during deceleration
• Check nominal A.C. supply level
• Check for supply disturbances which could cause the D.C. bus level to rise
• Check motor insulation using an insulation tester</td></tr>
<tr><td>E003</td><td>Over Current</td></tr>
<tr><td></td><td>The instantaneous drive output current has exceeded the over current threshold of the drive.
This error cannot be reset until 10 s after it was initiated.
Recommended Actions:
• Increase time taken for the drive to accelerate/decelerate
• Check for short circuit on the output cabling
• Check integrity of the motor insulation using an insulation tester
• Check the motor cable length is within limits of the drive
• Reduce the value set in Current Loop Gain (P3.23)</td></tr>
<tr><td>E006</td><td>External Error</td></tr>
<tr><td></td><td>An external error has been generated by a digital input when configured as External Error (14).</td></tr>
<tr><td>E007</td><td>Motor Over Speed</td></tr>
<tr><td></td><td>Ramp Output (P1.14) has exceeded the threshold defined by 1.2 x Maximum Frequency Limit (P2.02).
Recommended actions:
• Check that the motor is not being driven by another part of the system</td></tr>
<tr><td>E009</td><td>Capacitor Failed</td></tr>
<tr><td></td><td>The D.C. bus capacitors have failed - Contact the supplier of the drive.</td></tr>
</table>

Error	Diagnosis
E018	**Tune Interrupted**
	The drive was prevented from completing an auto-tune, because either the drive enable or the drive run signals were removed. **Recommended actions:** • Ensure the drive enable signal is active for the entire auto-tune. This can be checked using *Sequencer Input and Output Indicators* (**P1.11**) • Ensure a run signal (Run Forward, Run Reverse or Run) is active for the entire auto-tune. This can be checked using *Run & Direction Indicators* (**P1.12**) • If these signals are supplied by a digital input, check the states of the IO using *Digital IO Indicators* (**P1.25**)
E020	**Motor Temp**
	The drive has estimated that the motor has become too hot based on the *Motor Rated Current* (**P3.01**) and *Thermal Protection Action* (**P3.21**). *Motor Thermal Percentage* (**P1.22**) displays the motor temperature as a percentage of the maximum value. The error occurs when this parameter reaches 100 %. **Recommended actions:** • Ensure the load is not jammed / sticking • Check the load on the motor has not changed • Ensure the motor rated current is correct.
E021	**Drive Temp 1**
	An IGBT junction over-temperature has been detected. **Recommended actions:** • Check enclosure temperature • Check enclosure / drive fans are still functioning correctly • Clean the fan filter if being used • Check enclosure ventilation paths • Check enclosure door filters • Increase ventilation • Reduce duty cycle • Increase acceleration / deceleration rate parameter values • Reduce motor load • Ensure all three supply phases are present and balanced • Confirm the drive is correctly sized for the application • Use a drive with larger current / power rating
E023	**Drive Temp 2**
	A power stage over-temperature has been detected. **Recommended actions:** • See Drive Temp 1
E027	**Drive Temp 3**
	A D.C. bus component over temperature has been detected. **Recommended actions:** • See Drive Temp 1.
E028	**An In 1 Current**
	A current loss was detected in T2 analog input 1 and the input type is set to 4-20 mA Error (6). Loss of input is detected if the current falls below 3 mA. **Recommended actions:** • Check control wiring is correct • Check control wiring is undamaged • Check T2 *Analog Input 1 Type* (**P6.01**) • Check the current signal is present and greater than 3 mA

Error	Diagnosis
E029	**An In 2 Current**
	A current loss was detected in T4 analog input 2 and the input type is set to 4-20 mA Error (6). Loss of input is detected if the current falls below 3 mA. **Recommended actions:** • Check control wiring is correct • Check control wiring is undamaged • Check T4 *Analog Input 2 Type* (**P6.02**) • Check the current signal is present and greater than 3 mA
E030	**Watchdog Timeout**
	Once the control word has been enabled, it must continue to be written to at least once a second to prevent a Watchdog Timeout error from being generated.
E032	**Supply Phase**
	The drive has detected a supply phase loss or large supply imbalance. **Recommended actions:** • Check the A.C. supply voltage balance and level at full load • Check the output current stability • Reduce the duty cycle • Reduce the motor load
E033	**Motor Resistance**
	The auto-tune test to measure the motor stator resistance has failed because the output current failed to rise to the correct level to produce an accurate measurement. **Recommended actions:** • Check the motor cable / connections • Check the integrity of the motor stator windings using an insulation tester • Check the motor phase to phase resistance at the drive terminals • Check the motor phase to phase resistance at the motor terminals • Select *Linear V to F* (1) in *Motor Control Mode* (**P3.05**) and verify the output current waveforms with an oscilloscope • Replace the motor
E034	**Remote Keypad**
	A remote keypad has been removed whilst the RUN and STOP buttons have been configured to Run/Stop the drive. **Recommended Actions:** • Check cable connection
E035	**Control Word**
	Bit 12 (Control Word Error) in *Binary Control Word* (**P4.18**) has been set to 1 whilst the control word is enabled (bit 15 = 1).
E036	**User Save**
	The user-save parameters have been corrupted. **Recommended actions:** • Restore Factory Defaults (**P4.01**)
E037	**Power Down Save**
	The power down save parameters have been corrupted. **Recommended actions:** • Restore Factory Defaults (**P4.01**)
E093	**Inter-Processor**
	Communication between the control board processor and the power stage processor has been lost. This can be caused by extreme levels of noise on the system, follow guidance in section 4.7 *Electromagnetic compatibility (EMC)*.
E098	**Motor Phase**
	Motor Phase Loss Detection (**P4.15**) is enabled and a motor phase loss has been detected. **Recommended actions:** • Check motor and drive connections • Check cable integrity
E099	**Save Blocked**
	A save has been triggered while Marshal is attempting to communicate with the drive. **Recommended actions:** • Save parameter settings using *Save Parameters* (**P4.19**)

Error	Diagnosis
E172	**Fire Mode Error**
	Fire mode has been deactivated and errors were suppressed while the drive was in fire mode. See *Error History 1* (**P1.30**) to *Error History 3* (**P1.32**).
E189	**An In 1 Overload**
	The input current on T2 analog input 1 has exceeded 24 mA. **Recommended actions:** • Check control wiring is correct. • Check control wiring is undamaged. • Check *T2 Analog Input 1 Type* (**P6.01**)
E190	**An In 2 Overload**
	The input current on T4 analog input 2 has exceeded 24 mA. **Recommended actions:** • Check control wiring is correct. • Check control wiring is undamaged. • Check *T4 Analog Input 2 Type* (**P6.02)**
E216	**Firmware Fault 1**
	Hardware fault - Contact the supplier of the drive.
E220	**Firmware Fault 2**
	Hardware fault - Contact the supplier of the drive.
E222	**Firmware Fault 3**
	Hardware fault - Contact the supplier of the drive.
E224	**Firmware Fault 4**
	Hardware fault - Contact the supplier of the drive.
E228	**Ground fault**
	The drive has detected a ground (earth) fault on the motor cable/windings. **Recommended actions:** • Check for short circuit to ground (earth) on the output cables • Check the integrity of the motor insulation using an insulation tester
E232	**Firmware Fault 5**
	Hardware fault - Contact the supplier of the drive.
E235	**Firmware Fault 6**
	Hardware fault - Contact the supplier of the drive.
E237	**Firmware Incompatible**
	There is a mismatch between the user and power firmware in the drive. **Recommended Actions:** Re-download the power and user firmware to the drive. If the issue persists, contact the supplier of the drive
E245	**Firmware Fault 7**
	A firmware update has been interrupted. **Recommended Actions:** • Restart the drive. • If the firmware was being downloaded, try again If the issue persists this could indicate a hardware fault – Contact the supplier of the drive.
E251	**Saved Corrupted**
	This error indicates that parameter data has been corrupted. **Recommended actions:** • Restore factory defaults (**P4.01**)
E252	**Database Changed**
	A firmware update has been interrupted. The firmware has been changed but the project parameter values have been lost. **Recommended actions:** • Restore Factory Defaults (**P4.01**)

10 Technical data

This chapter covers additional technical data relating to the drive. This includes:

- Drive deratings for 4 kHz and 12 kHz (3 kHz and 9 kHz Frame 4) switching frequency for standard and increased ambient temperatures
- Drive losses (Power dissipation)
- Drive storage
- Emission compliance for switching frequency and motor cable length cross reference
- Maximum cable lengths for 12 kHz switching frequency(9 kHz for Frame 4)
- Miscellaneous drive data
- IP rating description
- Vibration test specification

Table 10-1 Environment specifications

Specification	Detail
Storage temperature	-40 °C to 60 °C (-40 °F to 140 °F)[1]
Operating temperature without derate	-10 °C to 40 °C (14 °F to 104 °F)
Operating temperature with derate	-10 °C to 60 °C (14 °F to 140 °F)
Altitude	≤3000 m (1000 m to 3000 m derate 1 % over 100 m)[2]
Humidity	95 % non-condensing at 40 °C / 104 °F - EN61800-2(3k3)
Pollution	Pollution degree 2 - Dry, non-conducting pollution only
IP Rating	IP20
Vibration	Tested to IEC 60068-2-6
Corrosive Environments	Concentrations of corrosive gases must not exceed the levels given in: EN 60721-3-3 ISO9223 Class C3

[1] See *section 10.3 Drive storage*

[2]See section 10.1.2 *Altitude*

10.1 Drive derating

The drive output current must be derated when the drive is used in a suboptimal environment such as a higher altitude, increased ambient temperature, reduced drive clearance, or if an increased switching frequency is used. The maximum continuous output current deratings in the following tables should be used.

If a drive is to be mounted in a sealed enclosure with no air flow (<2 m/s) over the drive, select an operating temperature 5 °C above the measured maximum internal temperature.

10.1.1 Temperature

Table 10-2 Maximum permissible continuous output current

Drive Model Number	Nominal Power Rating		Maximum continuous output current @ 40°C		Maximum continuous output current @ 50°C		Maximum continuous output current @ 60 °C	
	kW	hp	4 kHz *	12 kHz *	4 kHz *	12 kHz *	4 kHz *	12 kHz *
			A	A	A	A	A	A
100 V Drive (100 to 120 V ±10 %)								
S100-01113	0.18	0.25	1.2	1	1	1	0.8	0.8
S100-01123	0.25	0.33	1.4	1.2	1.2	1.2	1	1
S100-01133	0.37	0.5	2.2	1.4	1.4	1.4	1.2	1.2
S100-03113	0.55	0.75	3.2	2.2	2.2	1.6	1.4	1.4
S100-03123	0.75	1	4.2	3.2	3.2	2.2	2.2	2.2
S100-03133	1.1	1.5	6	4.2	4.2	3.2	3.2	3.2

Drive Model Number	Nominal Power Rating		Maximum continuous output current @ 40°C		Maximum continuous output current @ 50°C		Maximum continuous output current @ 60 °C	
	kW	hp	4 kHz *	12 kHz *	4 kHz *	12 kHz *	4 kHz *	12 kHz *
			A	A	A	A	A	A
200 V Drive (200 to 240 V ±10 %)								
S100-01S13	0.18	0.25	1.4	1.2	1.2	1.2	1	1
S100-01213	0.18	0.25	1.4	1.2	1.2	1.2	1	1
S100-02S11	0.18	0.25	1.2	1	1	1	0.8	0.8
S100-01S23	0.25	0.33	1.6	1.4	1.4	1.4	1.2	1.2
S100-01223	0.25	0.33	1.6	1.4	1.4	1.4	1.2	1.2
S100-02S21	0.25	0.33	1.4	1.2	1.2	1.2	1	1
S100-01S33	0.37	0.5	2.4	1.6	1.6	1.6	1.4	1.4
S100-01233	0.37	0.5	2.4	1.6	1.6	1.6	1.4	1.4
S100-02S31	0.37	0.5	2.2	1.4	1.4	1.4	1.2	1.2
S100-01S43	0.55	0.75	3.5	2.4	2.4	2.4	1.6	1.6
S100-01243	0.55	0.75	3.5	2.4	2.4	2.4	1.6	1.6
S100-02S41	0.55	0.75	3.2	2.2	2.2	2.2	1.4	1.4
S100-01S53	0.75	1	4.6	3.5	3.5	3.5	2.4	2.4
S100-01253	0.75	1	4.6	3.5	3.5	3.5	2.4	2.4
S100-02S51	0.75	1	4.2	3.2	3.2	3.2	2.2	2.2
S100-01D63	1.1	1.5	6.6	4.6	4.6	4	3.5	3.5
S100-02S61	1.1	1.5	6	3.6	4.2	3.4	3.2	2.8
S100-01D73	1.5	2	7.5	6.6	6.6	5.5	4.6	4.6
S100-02S71	1.5	2	6.8	6	6	5.5	4.2	4.2
S100-03D13	2.2	3	10.6	6.8	7.5	6.6	6.6	5.5
400 V Drive (380 to 480 V ±10 %)								
S100-02413	0.37	0.5	1.2		1		0.8	
S100-02423	0.55	0.75	1.7	0.5	1.2		1	
S100-02433	0.75	1	2.2	0.6	1.7		1.2	
S100-02443	1.1	1.5	3.2	0.8	2.2	0.5	1.7	
S100-02453	1.5	2	3.7	1	3.2	0.55	2.2	
S100-02463	2.2	3	5.3	1.2	3.7	0.55	3.2	
S100-03413	3	3	7.2	2.2	5.3	1.2	3.7	0.8
S100-03423	4	5	8.8	3.2	7.2	1.2	5.3	1
S100-04413	5.5	7.5	13	8.8	8.8	5	3	3
S100-04423	7.5	10	16	12	12.4	8.8	5.5	3
S100-04433	11	15	23	14	16	12	8.5	5

* S100-04 3 kHz and 9kHz

10.1.2 Altitude

Altitude range of the Commander S100 is 0 to 3,000 m (9,900 ft), subject to the following conditions:

- 0 m to 1000 m above sea level: no derate required.
- 1,000 m to 3,000 m (3,300 ft to 9,900 ft) above sea level: de-rate the maximum output current from the specified figure by 1 % per 100 m (330 ft) above 1,000 m (3,300 ft). For example at 3,000 m (9,900 ft) the output current of the drive would have to be de-rated by 20 %.

10.2 Power dissipation

Table 10-3 Drive losses

Drive Model Number	Power Rating		Supply Phases	Standby Drive Losses	Drive Losses at Rated Power	Efficiency
	kW	hp		W	W	%
100 V Drives						
S100-01113	0.18	0.25	1	3.1	9.9	96.1
S100-01123	0.25	0.33	1	3.1	12.3	96.4
S100-01133	0.37	0.50	1	4	17.8	96.2
S100-03113	0.55	0.75	1	4	24.7	96.4
S100-03123	0.75	1	1	3.4	40.8	95.8
S100-03133	1.10	1.50	1	3.2	54.5	95.5
200 V Drives						
S100-01S13	0.18	0.25	1	4.2	12.3	96.4
S100-01213	0.18	0.25	2	4.2	11.2	96.4
S100-02S11	0.18	0.25	1	3.7	10.7	96.2
S100-01S23	0.25	0.33	1	4.2	13.8	96.7
S100-01223	0.25	0.33	2	4.2	12	96.7
S100-02S21	0.25	0.33	1	3.7	12.9	96.6
S100-01S33	0.37	0.50	1	4.2	18.4	96.5
S100-01233	0.37	0.50	2	4.2	16.3	97
S100-02S31	0.37	0.50	1	3.7	21.4	95.8
S100-01S43	0.55	0.75	1	4.1	26.6	96.8
S100-01243	0.55	0.75	2	4.2	24.7	97.2
S100-02S41	0.55	0.75	1	4.5	26.5	96.7
S100-01S53	0.75	1	1	4.1	33.9	96.9
S100-01253	0.75	1	2	4.3	29.7	97
S100-02S51	0.75	1	1	4.7	34.5	96.8
S100-01D63	1.10	1.50	1	5.2	42.9	97.0
			3	5.7	37.3	97.4
S100-02S61	1.10	1.50	1	3.4	43.1	97.1
S100-01D73	1.50	2	1	4.3	57.5	96.7
			3	4.0	48.5	97.3
S100-02S71	1.50	2	1	4.4	62.7	96.8
S100-03D13	2.20	3	1	3.0	93.9	96.4
			3	4.0	76.8	97
400 V Drives						
S100-02413	0.37	0.50	3	6.9	18.2	96.9
S100-02423	0.55	0.75	3	10.5	24.5	97
S100-02433	0.75	1	3	6.8	26.8	97.3
S100-02443	1.10	1.50	3	6.8	34.3	97.6
S100-02453	1.50	2	3	6.5	45.4	97.6
S100-02463	2.20	3	3	6.5	89.3	96.9
S100-03413	3	3	3	6.6	84.6	97.6
S100-03423	4	5	3	6.4	118.6	97.6
S100-04413	5.5	7.5	3	7.95	161.0	97.6
S100-04423	7.5	10	3	8.2	219.8	97.4
S100-04433	11	15	3	8.2	323.6	97.5

10.3 Drive storage

-40 °C (-40 °F) to +60 °C (140 °F) for long term storage.
Storage time is 2 years.

Low voltage capacitors cannot be reformed due to their location in the circuit and thus may require replacing if the drive is stored for a period of 2 years or greater without power being applied. It is therefore recommended that drive are powered up for a minimum of 1 hour after every 2 years of storage. This process allows the drive to be stored for a further 2 years.

10.4 Emission compliance

The drive contains an in-built filter for basic emission control. An additional optional external filter provides further reduction of emission. The requirements of the following standards are met, depending on the motor cable length and switching frequency.

Table 10-4 Emission compliance

Drive Model Number	Power Rating		Using Internal Filter Only		Using Internal and External Filter		
			Switching Frequency				
	kW	hp	4 kHz		4 kHz		12 kHz
			Motor Cable Length				
			5 m	20 m	20 m	50 m	20 m
100 V Drives (100 to 120 V ±10 %)							
S100-01113	0.18	0.25	C3				
S100-01123	0.25	0.33	C3				
S100-01133	0.37	0.50	C3				
S100-03113	0.55	0.75	C3				
S100-03123	0.75	1	C3				
S100-03133	1.10	1.50	C3				
200 V Drives (200 to 240 V ±10 %)							
S100-01S13	0.18	0.25		C3	C1	C2*	C2
S100-01213	0.18	0.25		C3	C1	C2	C2
S100-02S11	0.18	0.25	C1				
S100-01S23	0.25	0.33		C3	C1	C2*	C2
S100-01223	0.25	0.33		C3	C1	C2	C2
S100-02S21	0.25	0.33	C1				
S100-01S33	0.37	0.50		C3	C1	C2*	C2
S100-01233	0.37	0.50		C3	C1	C2	C2
S100-02S31	0.37	0.50	C1				
S100-01S43	0.55	0.75		C3	C1	C2*	C2
S100-01243	0.55	0.75		C3	C1	C2	C2
S100-02S41	0.55	0.75	C1				
S100-01S53	0.75	1		C3	C1	C2*	C2
S100-01253	0.75	1		C3	C1	C2	C2
S100-02S51	0.75	1	C1				
S100-01D63	1.10	1.50		C3	C1	C2*	C2
S100-02S61	1.10	1.50	C1				
S100-01D73	1.50	2		C3	C1	C2*	C2
S100-02S71	1.50	2	C1				
S100-03D13	2.20	3	C3		C1	C2	C2
400 V Drives (380 to 480 V ±10 %)							
S100-02413	0.37	0.50	C3		C1	C2	C2
S100-02423	0.55	0.75	C3		C1	C2	C2
S100-02433	0.75	1	C3		C1	C2	C2
S100-02443	1.10	1.50	C3		C1	C2	C2
S100-02453	1.50	2	C3		C1	C2	C2
S100-02463	2.20	3	C3		C1	C2	C2
S100-03413	3	3	C3		C1	C2	C2
S100-03423	4	5	C3		C1	C2	C2
S100-04413	5.5	7.5	C3		C1	C2**	C2**
S100-04423	7.5	10	C3		C1	C2**	C2**
S100-04433	11	15	C3		C1	C2**	C2**

* C2 up to 50 m with the Commander C filter only. C2 up to 25 m with the Commander S filter (footprint mountable).

** Up to 100 m

NOTE

Low-leakage filters achieve C1 up to 10 m at 4 kHz and C2 up to 10 m at 12 kHz.(3 kHz and 9 kHz for Frame 4)

This is a summary of the EMC performance of the drive and the guidelines in *section 4.7.1 EMC compliant installation* should be adhered to. For full details, refer to the EMC Data Sheet which can be obtained from the supplier of the drive.

CAUTION

This is a product of the restricted distribution class according to IEC 61800-3. In a residential environment this product may cause radio interference in which case the user may be required to take adequate measures.
Residential generic standard IEC 61000-6-3.
EN 61800-3:2018 first environment unrestricted distribution
EN 61800-3:2018 defines the following:

- The first environment is one that includes residential premises. It also includes establishments directly connected without intermediate transformers to a low-voltage power supply network which supplies buildings used for residential purposes. The second environment is one that includes all establishments other than those directly connected to a low-voltage power supply network which supplies buildings used for residential purposes.
- Restricted distribution is defined as a mode of sales distribution in which the manufacturer restricts the supply of equipment to suppliers, customers or users who separately or jointly have technical competence in the EMC requirements of the application of drives.

IEC 61800-3:2018 and EN 61800-3:2018

Power drive systems are categorized C1 to C4:

Table 10-5 Power drive system categories

Category	Definition
C1	Intended for use in the first or second environments
C2	Not a plug-in or movable device, and intended for use in the first environment only when installed by a professional, or in the second environment
C3	Intended for use in the second environment, not the first environment
C4	Rated at over 1000 V or over 400 A, intended for use in complex systems in the second environment

10.4.1 Optional external EMC filters

Table 10-6 Drive and EMC filter cross reference

Model Number	Power Rating (kW)	Power Rating (hp)	CT Part Number Commander S Filter	CT Part Number Commander S Low Leakage Filter	CT Part Number Alternative Commander C Filter*
100 V Drives (100 to 120 V ±10 %)					
S100-01113	0.18	0.25	4200-0026	4200-0038	
S100-01123	0.25	0.33	4200-0026	4200-0038	
S100-01133	0.37	0.50	4200-0026	4200-0038	
S100-03113	0.55	0.75	4200-0028	4200-0039	
S100-03123	0.75	1	4200-0028	4200-0039	
S100-03133	1.10	1.50	4200-0028	4200-0039	
200 V Drives (200 to 240 V ±10 %)					
S100-01S13	0.18	0.25	4200-0026	4200-0038	4200-1000
S100-01213	0.18	0.25	4200-0032	4200-0040	4200-2003
S100-01S23	0.25	0.33	4200-0026	4200-0038	4200-1000
S100-01223	0.25	0.33	4200-0032	4200-0040	4200-2003
S100-01S33	0.37	0.50	4200-0026	4200-0038	4200-1000
S100-01233	0.37	0.50	4200-0032	4200-0040	4200-2003
S100-01S43	0.55	0.75	4200-0026	4200-0038	4200-1000
S100-01243	0.55	0.75	4200-0032	4200-0040	4200-2003
S100-01S53	0.75	1	4200-0026	4200-0038	4200-1000
S100-01253	0.75	1	4200-0032	4200-0040	4200-2003
S100-01D63	1.10	1.50	4200-0026 (1 ph) 4200-0032 (3 ph)	4200-0038 (1 ph) 4200-0040 (3 ph)	4200-2001 (1 ph) 4200-2003 (3 ph)
S100-01D73	1.50	2	4200-0026 (1 ph) 4200-0032 (3 ph)	4200-0038 (1 ph) 4200-0040 (3 ph)	4200-2001 (1 ph) 4200-2003 (3 ph)
S100-03D13	2.20	3	4200-0028 (1 ph) 4200-0033 (3 ph)	4200-0039 (1 ph) 4200-0042 (3 ph)	4200-4000 (1 ph) 4200-4002 (3 ph)

Model Number	Power Rating (kW)	Power Rating (hp)	CT Part Number Commander S Filter	CT Part Number Commander S Low Leakage Filter	CT Part Number Alternative Commander C Filter*
400 V Drives (380 to 480 V ±10 %)					
S100-02413	0.37	0.50	4200-0034	4200-0041	4200-2005
S100-02423	0.55	0.75	4200-0034	4200-0041	4200-2005
S100-02433	0.75	1	4200-0034	4200-0041	4200-2005
S100-02443	1.10	1.50	4200-0034	4200-0041	4200-2005
S100-02453	1.50	2	4200-0034	4200-0041	4200-2005
S100-02463	2.20	3	4200-0034	4200-0041	4200-2005
S100-03413	3	3	4200-0033	4200-0042	4200-3008
S100-03423	4	5	4200-0033	4200-0042	4200-3008
S100-04413	5.5	7.5			4200-0252
S100-04423	7.5	10			4200-0252
S100-04433	11	15			4200-0252

*The alternative Commander C Filter does not support footprint mounting of the Commander S but does meet the levels specified in Table 10-4 with the following exception: The S100-01243 drive does not meet C1 at 4 kHz with a 20 m cable length.

10.5 Maximum cable lengths

Since capacitance in the motor cable causes loading on the output of the drive, ensure the cable length does not exceed 50 m. For motor lengths to comply to a particular EMC standard, such as C1, refer to the cable lengths given in section 10.4 *Emission compliance* .

10.6 Starts per hour

By electronic control: Unlimited

By interrupting the A.C. supply: ≤20 (equally spaced)

10.7 Start-up time

The time taken from the moment of applying power to the drive, to the drive being ready to run the motor is 2.5 s

10.8 Maximum output frequency

The Commander S100 is limited to maximum output frequency of 300 Hz.

10.9 Accuracy and resolution

Frequency:

The absolute frequency accuracy depends on the accuracy of the oscillator used with the drive microprocessor. The accuracy of the oscillator is ± 0.02 %, and so the absolute frequency accuracy is ± 0.02 % of the reference, when a preset frequency is used. If an analog input is used, the absolute accuracy is further limited by the absolute accuracy of the analog input.

The following data applies to the drive only; it does not include the performance of the source of the control signals.

Open & closed loop resolution:

Preset frequency reference: 0.1 Hz

Analog input 1: 11 bit

Analog input 2: 11 bit

Current: The resolution of the current feedback is 10 bit plus sign.

Accuracy: typical 2 %

worst case 5 %

10.10 Acoustic noise

The heatsink fan generates the majority of the sound produced by the drive. Table 10-7 gives the sound pressure level at 1 m produced by the drive for the heatsink fan running at the maximum speed.

Table 10-7

Frame Size	Drive Voltage Rating	Acoustic Noise with Internal Fan Running
		dBA
S100-01	100 V, 200 V	53.6
S100-02	200 V	53.6
	400 V	68.8
S100-03	100 V	62.8
	200 V, 400 V	63.8
S100-04	400 V	59.1

10.11 Corrosive gasses

Concentrations of corrosive gases must not exceed the levels given in:

- EN 60721-3-3 ISO9223 Class C3

10.12 IP rating

The drive is rated to IP20 pollution degree 2 (non-conductive contamination only). The IP rating of a product is a measure of protection against ingress and contact to foreign bodies and water. It is stated as IP XX, where the two digits (XX) indicate the degree of protection provided as shown in Table 10-8.

Table 10-8 Rating descriptions

First Digit	Second Digit
Protection against foreign bodies and access to hazardous parts	Protection against ingress of water
0 Non-protected	0 Non-protected
1 Protected against solid foreign objects of 50 mm ø and greater (back of hand)	1 Protected against vertically falling water drops
2 Protected against solid foreign objects of 12.5 mm ø and greater (finger)	2 Protected against vertically falling water drops when enclosure tilted up to 15°
3 Protected against solid foreign objects of 2.5 mm ø and greater (tool)	3 Protected against spraying water
4 Protected against solid foreign objects of 1.0 mm ø and greater (wire)	4 Protected against splashing water
5 Dust-protected (wire)	5 Protected against water jets
6 Dust-tight (wire)	6 Protected against powerful water jets
7 -	7 Protected against the effects of temporary immersion in water
8 -	8 Protected against the effects of continuous immersion in water

Table 10-9 UL enclosure ratings

UL Rating	Description
Type 1	Enclosures are intended for indoor use, primarily to provide a degree of protection against limited amounts of falling dirt.
Type 12	Enclosures are intended for indoor use, primarily to provide a degree of protection against dust, falling dirt and dripping non-corrosive liquids.

10.13 Vibration

Bump Test

Testing in each of three mutually perpendicular axes in turn.
Referenced standard: IEC 60068-2-27: Test Ea:
Severity: 15 g peak, 11 ms pulse duration, half sine.
No. of Bumps: 18 (3 in each direction of each axis).
Referenced standard: IEC 60068-2-29: Test Eb:
Severity: 18 g peak, 6 ms pulse duration, half sine.
No. of Bumps: 600 (100 in each direction of each axis).

Random Vibration Test

Testing in each of three mutually perpendicular axes in turn.
Referenced standard: IEC 60068-2-64: Test Fh:
Severity: 1.0 m^2/s^3 (0.01 g^2/Hz) ASD from 5 to 20 Hz
-3 db/octave from 20 to 200 Hz
Duration: 30 minutes in each of 3 mutually perpendicular axes.

Sinusoidal Vibration Test

Testing in each of three mutually perpendicular axes in turn.
Referenced standard: IEC 60068-2-6: Test Fc:
Frequency range: 5 to 500 Hz
Severity: 3.5 mm peak displacement from 5 to 9 Hz
10 m/s^2 peak acceleration from 9 to 200 Hz
15 m/s^2 peak acceleration from 200 to 500 Hz
Sweep rate:1 octave/minute
Duration: 15 minutes in each of 3 mutually perpendicular axes.
Referenced standard: EN 61800-5-1: 2007, Section 5.2.6.4. referring to IEC 60068-2-6:
Frequency range: 10 to 150 Hz
Severity: 0.075 mm amplitude from 10 to 57 Hz
1g peak acceleration from 57 to 150 Hz
Sweep rate:1 octave/minute
Duration:10 sweep cycles per axis in each of 3 mutually perpendicular axes.

Testing to Environmental Category ENV3

Subjected to resonance search in the range listed. If no natural frequencies found then subjected only to endurance test.

Referenced standard: Environment Category ENV3:
Frequency range: 5 to 13.2 Hz ± 1.0 mm
13.2 to 100 Hz ± 0.7 g (6.9 ms -2)
For more information, please refer to section 12 Vibration Test 1 of the Lloyds Register Test Specification Number 1.

11 UL Listing Information

11.1 UL file reference

All products covered by this User Guide are UL Listed to both Canadian and US requirements. The UL file reference is: NMMS/7.E171230

11.2 Environment

Drive are Open Type as supplied.

Products must be installed in an enclosure in a Pollution Degree 2 environment or better (dry, non-conductive pollution only).

Drive can deliver full rated output current at surrounding air temperatures up to 40 °C, and derated output up to 60 °C depending on the model number. Refer to section 10 *Technical data*.

11.3 Mounting

Products are intended to be mounted on a vertical surface. The drive can be either screwed to a wall or mounted using the DIN rail mounting mechanism provided. Products may be mounted side by side with recommended spacing between them. Refer to section 3.3 *Enclosure dimensions* and section 3 *Mechanical installation*.

11.4 Terminal torque

Terminals must be tightened to the rated torque specified. Refer to section 4.2 *Terminal torque settings*.

11.5 Wiring

Wires may be either 60 °C or 75 °C rated, copper wire only.

11.6 Ground connections

UL Listed closed-loop connectors (ring terminals) shall be used for ground connections. Refer to section *For dual-rated drives (S100-xxDxx), single phase connections should be made to L1 and L2.*.

11.7 Over voltage category

These products have been evaluated for OVC III. External transient suppression is not required except where the drive is installed at the origin of the installation. Refer to section 4.5 *Supply requirements*.

11.8 Branch circuit protection

For installation in the United States or Canada, Branch Circuit Protection must be provided in accordance with the National Electrical Code (NEC), the Canadian Electrical Code and any applicable local or provincial codes. Refer to section 4.4 *Fuse and MCB selection*.

11.9 Solid state short circuit protection

These products incorporate solid state short circuit protection. However, this does not provide branch circuit protection. Opening of the branch-circuit protective device may be an indication that a fault has been interrupted. To reduce the risk of fire or electric shock, the equipment should be examined and replaced if damaged. Refer to section 1.10 *Fuses and circuit breakers*.

11.10 Short circuit current rating (SCCR)

When protected by the specified fuses or circuit breakers, the products are suitable for use on a circuit capable of delivering not more than 5000 RMS symmetrical amperes, up to the rated voltage of the drive module. Refer to section 4.4 *Fuse and MCB selection*.

11.11 Motor overload protection

All models incorporate internal overload protection for the motor that is adjustable. Refer to section 6 *Running the motor*.

All models are provided with thermal memory retention.

The drives are provided with user terminals that can be connected to a motor thermistor. Refer to section 6.4 *Connecting motor thermistors*.

Index

A

Acceleration 46, 72
Alarms 64, 111

C

Cables 7, 23, 24, 25
Catch an Already Spinning Motor 80
Cautions 23, 30, 35, 39, 112, 120
Communication connections 38
Connect 14, 42
Control connections 35
Control terminal specification 36
Current Limit 81

D

Deceleration 46, 72
Defaults 45, 57, 83
Derating 116
Diagnostics 111
Dimensions 17, 18
DIN rail mounting 17
Display 13, 45, 63
Drive Enable 37, 46, 52, 86, 99
Drive losses 118

E

EMC 8, 30
Enclosure 8, 15, 18, 19, 20
Energy Optimizer 80
Errors 67, 84, 85, 112

F

Fire Mode 65, 77, 99
Frequency Limit 46, 69, 75
Frequency Reference Configuration 46, 70, 75
Function Select 94, 96, 97, 98, 99
Fuses 8, 21, 22, 25

G

Getting started 40, 46

J

Jog 52, 65, 73

K

Keypad 14, 43, 44, 49, 55, 66, 70, 73, 84, 98

L

Linear (Fixed) V to F 79

M

Marshal 9, 40
MCB 21, 22, 25
Mechanical installation 15
Menu 0 - FastStart 46, 57
Menu 1 - Status & monitoring 58, 63
Menu 2 - Reference & ramps 59, 69
Menu 3 - Motor setup 60, 78
Menu 4 - General 60, 83
Menu 5 - PID controller 61, 88
Menu 6 - IO configuration 62, 95
Menu structure 44, 45
Minimum Frequency Limit 47
Motor Control Mode 79
Motor Rated Current 78
Motor Rated Power Factor 78
Motor Rated Speed 78
Motor Rated Voltage 78
Motor sizing 12
Motor Stability Optimizer 81

N

Negative Logic 97
NFC 40, 86

P

Parameter descriptions 63
Parameter update rates 110
PID 88
Preset Frequency 47, 48, 49, 74, 75, 77
PWM Output 36, 95, 97

R

RCD 8, 29
Relay 35, 37, 97
Run/Stop Configuration 52, 98

S

Safety Information 7, 8
Saving parameters 41, 45
Scaling 89, 96, 97, 100
Security PIN 41, 43, 45, 83
Square (Quadratic) V to F 79
Stopping the motor 46, 52, 71
Switching Frequency 80, 116, 119

T

Threshold Detector 56, 92, 93, 94

U

Up/Down Percentage 47, 66, 70, 73, 75, 99

Nidec
All for dreams

Connect with us

www.controltechniques.com

www.kbelectronics.com

©2024 Nidec Control Techniques Limited. The information contained in this brochure is for guidance only and does not form part of any contract. The accuracy cannot be guaranteed as Nidec Control Techniques Ltd have an ongoing process of development and reserve the right to change the specification of their products without notice.

Nidec Control Techniques Limited. Registered Office: The Gro, Newtown, Powys SY16 3BE.

Registered in England and Wales. Company Reg. No. 01236886.

CONTROL TECHNIQUES

KB

0478-0650-07